MERITOR®
an ArvinMeritor brand

Maintenance Manual 4

Cam Brakes and Automatic Slack Adjusters

Supersedes Maintenance Manual 4B, Automatic Slack Adjusters

Revised 07-06

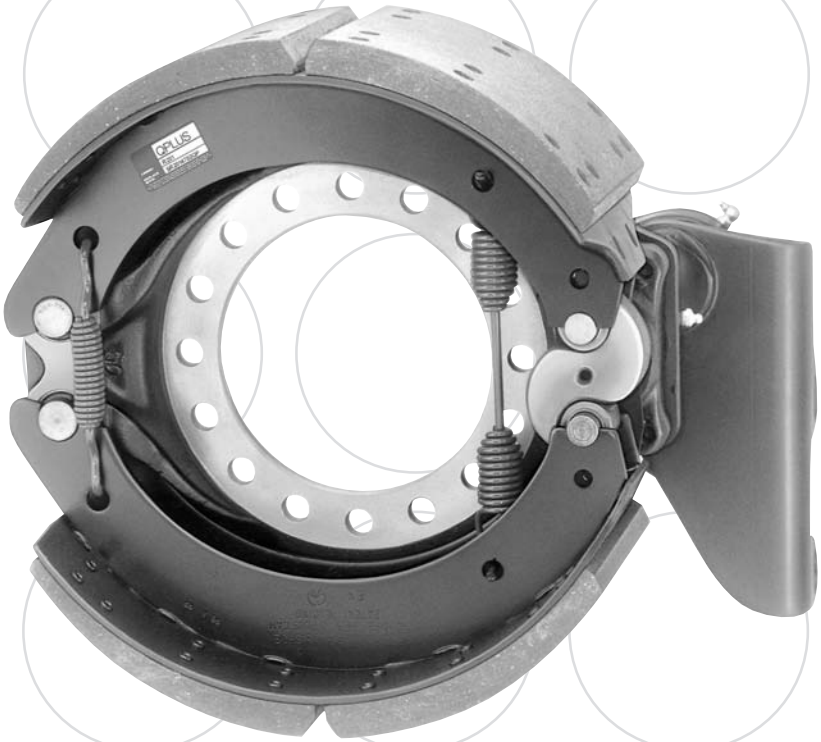

About This Manual

This manual provides maintenance and service information for Meritor cam brakes and automatic slack adjuster.

Before You Begin

1. Read and understand all instructions and procedures before you begin to service components.
2. Read and observe all Warning and Caution hazard alert messages in this publication. They provide information that can help prevent serious personal injury, damage to components, or both.
3. Follow your company's maintenance and service, installation, and diagnostics guidelines.
4. Use special tools when required to help avoid serious personal injury and damage to components.

Important Information

Meritor automatic slack adjusters (ASAs) should not need to be manually adjusted in service. ASAs should not have to be adjusted to correct excessive push rod stroke. The excessive stroke may be an indication that a problem exists with the foundation brake, ASA, brake actuator or other system components.

Meritor recommends troubleshooting the problem, replacing suspect components and then confirming proper brake operation prior to returning the vehicle into service.

In the event that a manual adjustment must be made (although not a common practice), a service appointment and full foundation brake, ASA, and other system component inspection should be conducted as soon as possible to ensure integrity of the overall brake system.

For Meritor brake adjustment, refer to the brake adjustment tables in this manual. For non-Meritor brake adjusters, refer to the brake manufacturer's service procedures.

Hazard Alert Messages and Torque Symbols

⚠ WARNING

A Warning alerts you to an instruction or procedure that you must follow exactly to avoid serious personal injury and damage to components.

⚠ CAUTION

A Caution alerts you to an instruction or procedure that you must follow exactly to avoid damage to components.

This symbol alerts you to tighten fasteners to a specified torque value.

How to Obtain Product and Service Information

On the Web

Visit Literature on Demand at arvinmeritor.com to access and order product, service, aftermarket, and warranty literature for ArvinMeritor's truck, trailer and specialty vehicle components.

Literature on Demand DVD (LODonDVD)

The LODonDVD contains product, service and warranty information for ArvinMeritor components. To order the DVD, visit Literature on Demand at arvinmeritor.com and specify TP-0742.

How to Obtain Tools, Supplies and Brake Service Kits

Call ArvinMeritor's Commercial Vehicle Aftermarket at 888-725-9355 to obtain Meritor tools and supplies.

Information contained in this publication was in effect at the time the publication was approved for printing and is subject to change without notice or liability. Meritor Heavy Vehicle Systems, LLC, reserves the right to revise the information presented or to discontinue the production of parts described at any time.

Contents

pg. i **Asbestos and Non-Asbestos Fibers**

1 **Section 1: Exploded Views**
- 15- and 16.5-Inch Q Plus™ and Q Series Cam Brakes with Cast Spiders
- 16.5-Inch Q Plus™ Cam Brake with Stamped Spiders

2 15-Inch Q Series Cam Brakes
4 Cast Plus™ Cam Brake
6 16.5-Inch P Series Cam Brakes
7 15-Inch T Series Cam Brakes
8 Automatic Slack Adjusters

9 **Section 2: Introduction**
- Components and Operation
- Cam Brakes
- Air Brake Chambers
- Automatic Slack Adjusters
- Spring Brake Chambers
- Cam Brake Models
- Q Plus™ Cam Brakes
- Q Plus™ LX500 and MX500 Cam Brakes

10 Cast Plus™ Cam Brakes
- Q Series Cam Brakes
- P Series
- Converting 16.5-Inch Q Series Brakes to the Q Plus™ Brake Design

11 How to Identify Q Plus™ and Q Series Cam Brakes
12 Important Information
- Automatic Slack Adjusters
- How an Automatic Slack Adjuster Works
- Factory-Installed Automatic Slack Adjusters on Q Plus™ LX500 and MX500 Cam Brake Packages
- Handed and Unhanded Slack Adjusters

13 Pull Pawls
- Clevis Types and Thread Sizes
- Thread Sizes
- Meritor Automatic Slack Adjusters are Color-Coded to Brake Type and Air Chamber Size
- Mylar Tag — Current Design
- Color-Coded Tie Wrap — Previous Design

14 Important Note
- When You Replace an Automatic Slack Adjuster

15 **Section 3: Removal and Disassembly**
- Removal
- Wheel Components
- Automatic Slack Adjuster

16 Brake Shoes

pg. 18 Check the Camshaft Bushing for Wear
- Verify That Cam-to-Bushing Free Play is Within Specification
- Removal
- Automatic Slack Adjuster from the Camshaft

19 Disassembly
- Automatic Slack Adjuster

20 **Section 4: Prepare Parts for Assembly**
- Clean, Dry and Inspect Parts
- Corrosion Protection
- Inspect Parts
- Brakes

21 Brake Drums
- Automatic Slack Adjuster

22 Camshaft

23 **Section 5: Assembly and Installation**
- Assembly
- Automatic Slack Adjuster

24 Installation
- Camshaft

25 Replace a Q Series or P Series Camshaft with a Q Plus™ Camshaft
- Replace a Hammerclaw Camshaft with a Standard Q Plus™ Camshaft

26 Shoe Return Spring
- Automatic Slack Adjuster onto the Camshaft

27 Assembly of the Slack Adjuster for a Bolted Camshaft
29 Welded Clevis
30 Threaded Clevis
- Verify That the Slack Adjuster Angle is Correct

31 Template Method
33 Brake Slack Adjuster Position (BSAP) Method
- Brake Shoes
- Q Plus™ 15- and 16.5-Inch Brakes and Q Series 16.5-Inch Brakes

34 Brake Shoes Equipped with a Lining Wear Sensor
35 Q Series 15-Inch Cam Brake
36 P Series and Cast Plus™ Cam Brakes
- T Series Cam Brake
- Drum and Wheel

Contents

pg. **37** **Section 6: Adjustment**
Important Information
Adjust the Brakes
Measure Free Stroke
38 Important Information
Commercial Vehicle Safety Alliance (CVSA) Guidelines
Measure Push Rod Travel or Adjusted Chamber Stroke
39 Alternate Method to Measure Push Rod Travel or Adjusted Chamber Stroke
CVSA North American Out-of-Service Criteria Reference Tables

40 **Section 7: Maintenance**
Lubrication
Cam Brakes
Camshaft Bushings
41 Rollers and Anchor Pins
Important Information
Automatic Slack Adjusters
Adjust the Brakes
At Brake Reline
42 Slack Adjusters Manufactured Before 1993
Grease Specifications
Anti-Seize Compound
43 Factory-Installed Automatic Slack Adjusters on Q Plus™ LX500 and MX500 Cam Brake Packages
Inspection and Maintenance Intervals
Reline the Brakes
Important Information on Linings and Primary Shoe Locations
Use the Correct Lining Material
44 Single Axles
Tandem Axles
Combination Friction Linings
Primary Shoe Locations
Major Overhaul
45 Inspection
Before You Return the Vehicle to Service

46 **Section 8: Diagnostics**
Important Information
Troubleshooting

48 **Section 9: Specifications**
Torque Specifications
Cam Brakes

⚠ ASBESTOS FIBERS WARNING

The following procedures for servicing brakes are recommended to reduce exposure to asbestos fiber dust, a cancer and lung disease hazard. Material Safety Data Sheets are available from ArvinMeritor.

Hazard Summary

Because some brake linings contain asbestos, workers who service brakes must understand the potential hazards of asbestos and precautions for reducing risks. Exposure to airborne asbestos dust can cause serious and possibly fatal diseases, including asbestosis (a chronic lung disease) and cancer, principally lung cancer and mesothelioma (a cancer of the lining of the chest or abdominal cavities). Some studies show that the risk of lung cancer among persons who smoke and who are exposed to asbestos is much greater than the risk for non-smokers. Symptoms of these diseases may not become apparent for 15, 20 or more years after the first exposure to asbestos.

Accordingly, workers must use caution to avoid creating and breathing dust when servicing brakes. Specific recommended work practices for reducing exposure to asbestos dust follow. Consult your employer for more details.

Recommended Work Practices

1. Separate Work Areas. Whenever feasible, service brakes in a separate area away from other operations to reduce risks to unprotected persons. OSHA has set a maximum allowable level of exposure for asbestos of 0.1 f/cc as an 8-hour time-weighted average and 1.0 f/cc averaged over a 30-minute period. Scientists disagree, however, to what extent adherence to the maximum allowable exposure levels will eliminate the risk of disease that can result from inhaling asbestos dust. OSHA requires that the following sign be posted at the entrance to areas where exposures exceed either of the maximum allowable levels:

DANGER: ASBESTOS
CANCER AND LUNG DISEASE HAZARD
AUTHORIZED PERSONNEL ONLY
RESPIRATORS AND PROTECTIVE CLOTHING
ARE REQUIRED IN THIS AREA.

2. Respiratory Protection. Wear a respirator equipped with a high-efficiency (HEPA) filter approved by NIOSH or MSHA for use with asbestos at all times when servicing brakes, beginning with the removal of the wheels.

3. Procedures for Servicing Brakes.

a. Enclose the brake assembly within a negative pressure enclosure. The enclosure should be equipped with a HEPA vacuum and worker arm sleeves. With the enclosure in place, use the HEPA vacuum to loosen and vacuum residue from the brake parts.

b. As an alternative procedure, use a catch basin with water and a biodegradable, non-phosphate, water-based detergent to wash the brake drum or rotor and other brake parts. The solution should be applied with low pressure to prevent dust from becoming airborne. Allow the solution to flow between the brake drum and the brake support or the brake rotor and caliper. The wheel hub and brake assembly components should be thoroughly wetted to suppress dust before the brake shoes or brake pads are removed. Wipe the brake parts clean with a cloth.

c. If an enclosed vacuum system or brake washing equipment is not available, employers may adopt their own written procedures for servicing brakes, provided that the exposure levels associated with the employer's procedures do not exceed the levels associated with the enclosed vacuum system or brake washing equipment. Consult OSHA regulations for more details.

d. Wear a respirator equipped with a HEPA filter approved by NIOSH or MSHA for use with asbestos when grinding or machining brake linings. In addition, do such work in an area with a local exhaust ventilation system equipped with a HEPA filter.

e. **NEVER** use compressed air by itself, dry brushing, or a vacuum not equipped with a HEPA filter when cleaning brake parts or assemblies. **NEVER** use carcinogenic solvents, flammable solvents, or solvents that can damage brake components as wetting agents.

4. Cleaning Work Areas. Clean work areas with a vacuum equipped with a HEPA filter or by wet wiping. **NEVER** use compressed air or dry sweeping to clean work areas. When you empty vacuum cleaners and handle used rags, wear a respirator equipped with a HEPA filter approved by NIOSH or MSHA for use with asbestos. When you replace a HEPA filter, wet the filter with a fine mist of water and dispose of the used filter with care.

5. Worker Clean-Up**.** After servicing brakes, wash your hands before you eat, drink or smoke. Shower after work. Do not wear work clothes home. Use a vacuum equipped with a HEPA filter to vacuum work clothes after they are worn. Launder them separately. Do not shake or use compressed air to remove dust from work clothes.

6. Waste Disposal. Dispose of discarded linings, used rags, cloths and HEPA filters with care, such as in sealed plastic bags. Consult applicable EPA, state and local regulations on waste disposal.

Regulatory Guidance

References to OSHA, NIOSH, MSHA, and EPA, which are regulatory agencies in the United States, are made to provide further guidance to employers and workers employed within the United States. Employers and workers employed outside of the United States should consult the regulations that apply to them for further guidance.

⚠ NON-ASBESTOS FIBERS WARNING

The following procedures for servicing brakes are recommended to reduce exposure to non-asbestos fiber dust, a cancer and lung disease hazard. Material Safety Data Sheets are available from ArvinMeritor.

Hazard Summary

Most recently manufactured brake linings do not contain asbestos fibers. These brake linings may contain one or more of a variety of ingredients, including glass fibers, mineral wool, aramid fibers, ceramic fibers and silica that can present health risks if inhaled. Scientists disagree on the extent of the risks from exposure to these substances. Nonetheless, exposure to silica dust can cause silicosis, a non-cancerous lung disease. Silicosis gradually reduces lung capacity and efficiency and can result in serious breathing difficulty. Some scientists believe other types of non-asbestos fibers, when inhaled, can cause similar diseases of the lung. In addition, silica dust and ceramic fiber dust are known to the State of California to cause lung cancer. U.S. and international agencies have also determined that dust from mineral wool, ceramic fibers and silica are potential causes of cancer.

Accordingly, workers must use caution to avoid creating and breathing dust when servicing brakes. Specific recommended work practices for reducing exposure to non-asbestos dust follow. Consult your employer for more details.

Recommended Work Practices

1. Separate Work Areas. Whenever feasible, service brakes in a separate area away from other operations to reduce risks to unprotected persons.

2. Respiratory Protection. OSHA has set a maximum allowable level of exposure for silica of 0.1 mg/m^3 as an 8-hour time-weighted average. Some manufacturers of non-asbestos brake linings recommend that exposures to other ingredients found in non-asbestos brake linings be kept below 1.0 f/cc as an 8-hour time-weighted average. Scientists disagree, however, to what extent adherence to these maximum allowable exposure levels will eliminate the risk of disease that can result from inhaling non-asbestos dust.

Therefore, wear respiratory protection at all times during brake servicing, beginning with the removal of the wheels. Wear a respirator equipped with a high-efficiency (HEPA) filter approved by NIOSH or MSHA, if the exposure levels may exceed OSHA or manufacturers' recommended maximum levels. Even when exposures are expected to be within the maximum allowable levels, wearing such a respirator at all times during brake servicing will help minimize exposure.

3. Procedures for Servicing Brakes.

a. Enclose the brake assembly within a negative pressure enclosure. The enclosure should be equipped with a HEPA vacuum and worker arm sleeves. With the enclosure in place, use the HEPA vacuum to loosen and vacuum residue from the brake parts.

b. As an alternative procedure, use a catch basin with water and a biodegradable, non-phosphate, water-based detergent to wash the brake drum or rotor and other brake parts. The solution should be applied with low pressure to prevent dust from becoming airborne. Allow the solution to flow between the brake drum and the brake support or the brake rotor and caliper. The wheel hub and brake assembly components should be thoroughly wetted to suppress dust before the brake shoes or brake pads are removed. Wipe the brake parts clean with a cloth.

c. If an enclosed vacuum system or brake washing equipment is not available, carefully clean the brake parts in the open air. Wet the parts with a solution applied with a pump-spray bottle that creates a fine mist. Use a solution containing water, and, if available, a biodegradable, non-phosphate, water-based detergent. The wheel hub and brake assembly components should be thoroughly wetted to suppress dust before the brake shoes or brake pads are removed. Wipe the brake parts clean with a cloth.

d. Wear a respirator equipped with a HEPA filter approved by NIOSH or MSHA when grinding or machining brake linings. In addition, do such work in an area with a local exhaust ventilation system equipped with a HEPA filter.

e. **NEVER** use compressed air by itself, dry brushing, or a vacuum not equipped with a HEPA filter when cleaning brake parts or assemblies. **NEVER** use carcinogenic solvents, flammable solvents, or solvents that can damage brake components as wetting agents.

4. Cleaning Work Areas. Clean work areas with a vacuum equipped with a HEPA filter or by wet wiping. **NEVER** use compressed air or dry sweeping to clean work areas. When you empty vacuum cleaners and handle used rags, wear a respirator equipped with a HEPA filter approved by NIOSH or MSHA, to minimize exposure. When you replace a HEPA filter, wet the filter with a fine mist of water and dispose of the used filter with care.

5. Worker Clean-Up. After servicing brakes, wash your hands before you eat, drink or smoke. Shower after work. Do not wear work clothes home. Use a vacuum equipped with a HEPA filter to vacuum work clothes after they are worn. Launder them separately. Do not shake or use compressed air to remove dust from work clothes.

6. Waste Disposal**.** Dispose of discarded linings, used rags, cloths and HEPA filters with care, such as in sealed plastic bags. Consult applicable EPA, state and local regulations on waste disposal.

Regulatory Guidance

References to OSHA, NIOSH, MSHA, and EPA, which are regulatory agencies in the United States, are made to provide further guidance to employers and workers employed within the United States. Employers and workers employed outside of the United States should consult the regulations that apply to them for further guidance.

15- and 16.5-Inch Q Plus™ and Q Series Cam Brakes with Cast Spiders

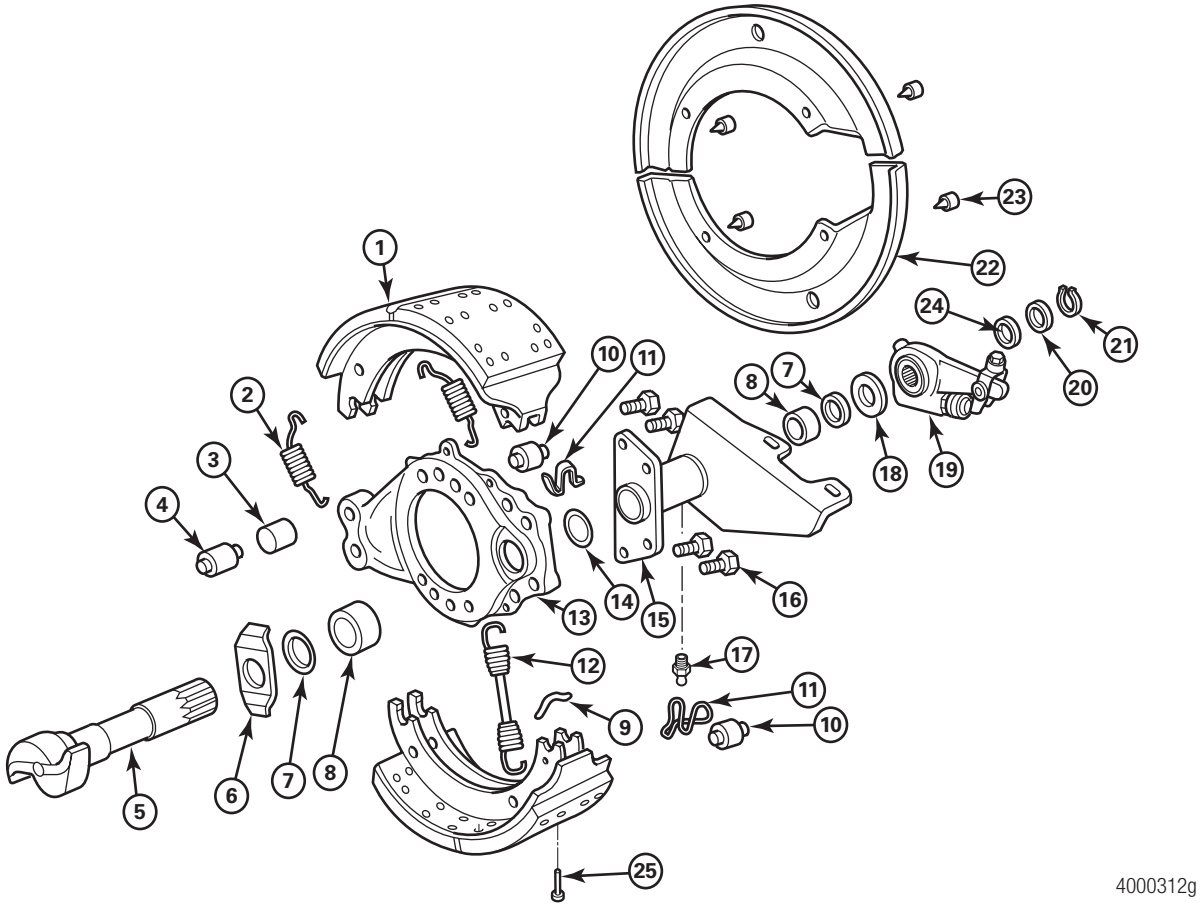

Item	Description
1	Shoe and Lining Assembly
2	Shoe Retaining Spring
3	Anchor Pin Bushing
4	Brake Shoe Anchor Pin
5	“S” Head Camshaft
6	Cam Head Washer
7	Camshaft Grease Seal
8	Camshaft Bushing
9	Return Spring Pin
10	Brake Shoe Roller
11	Shoe Roller Retainer
12	Brake Shoe Return Spring
13	Cast Brake Spider
14	Chamber Bracket Seal

Item	Description
15	Camshaft and Chamber Bracket
16	Chamber Bracket Capscrew
17	Grease Fitting
18	Thick Camshaft Thrust Washer
19	Automatic Slack Adjuster
20	Thick Camshaft Spacing Washer
21	Camshaft Snap Ring
22	Dust Shield
23	Dust Shield Capscrew
24	Thin Camshaft Spacing Washer
25	Lining Wear Sensor, If Equipped

16.5-Inch Q Plus™ Cam Brake with Stamped Spiders

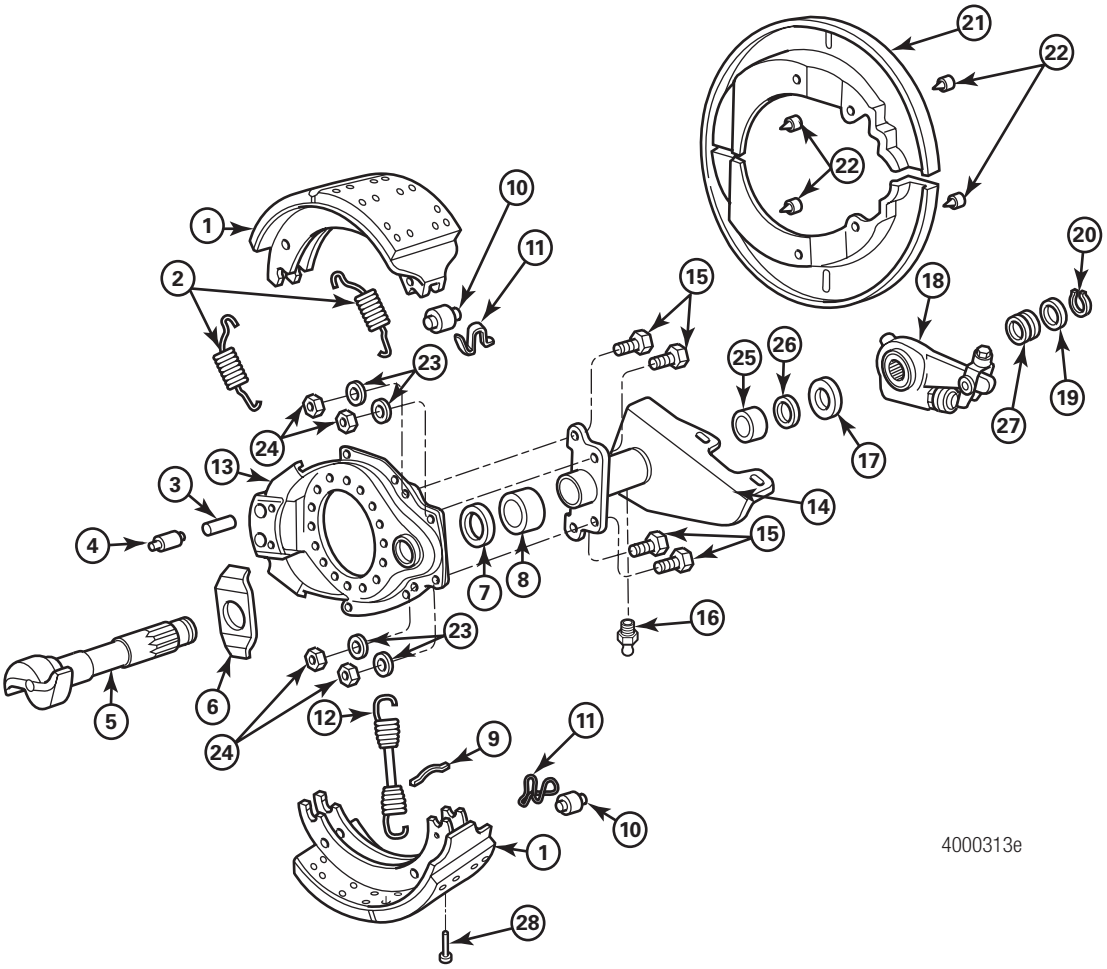

Item	Description	Item	Description
1	Shoe and Lining Assembly	15	Grade 8 Capscrew
2	Shoe Retaining Spring	16	Grease Fitting
3	Anchor Pin Bushing	17	Thick Camshaft Thrust Washer
4	Brake Shoe Anchor Pin	18	Automatic Slack Adjuster
5	“S” Head Camshaft	19	Thick Camshaft Spacing Washer
6	Cam Head Washer	20	Camshaft Snap Ring
7	Camshaft Seal	21	Dust Shield
8	Camshaft Bushing	22	Dust Shield Capscrew
9	Return Spring Pin	23	Hard Washer (4)
10	Brake Shoe Roller	24	Grade 8 Nut (4)
11	Shoe Roller Retainer	25	Camshaft Bushing
12	Brake Shoe Return Spring	26	Camshaft Seal
13	Stamped Brake Spider	27	Thin Camshaft Spacing Washer
14	Camshaft and Chamber Bracket	28	Lining Wear Sensor, If Equipped

15-Inch Q Series Cam Brakes

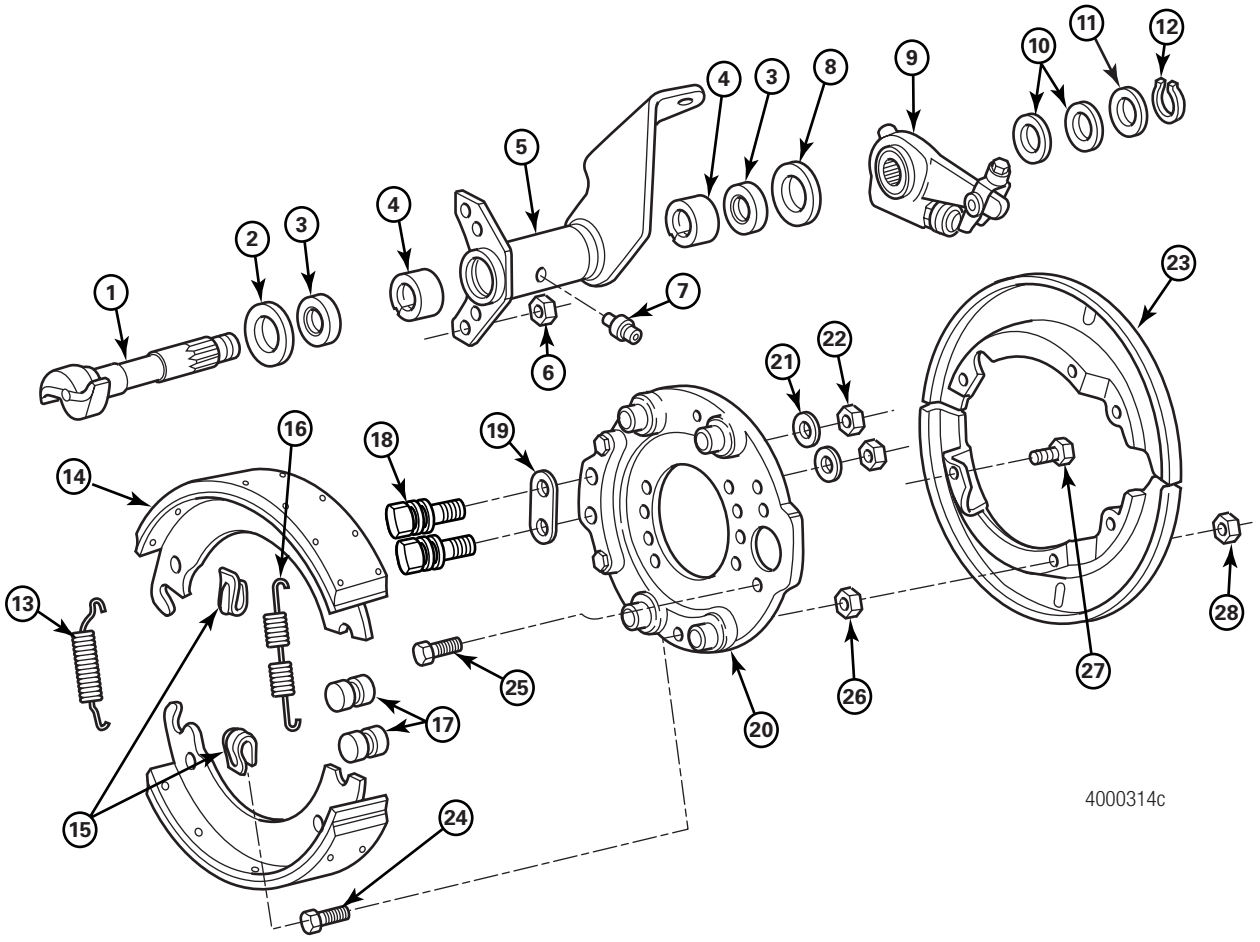

Item	Description
1	Camshaft
2	Cam Head Washer
3	Camshaft Grease Seal
4	Camshaft Bushing
5	Camshaft and Chamber Bracket
6	Camshaft Bracket Nut
7	Grease Fitting
8	Thick Camshaft Thrust Washer
9	Automatic Slack Adjuster
10	Thin Camshaft Spacers
11	Thick Hardened Washer
12	Camshaft Snap Ring
13	Shoe Retaining Spring
14	Shoe and Lining Assembly
15	Anti-Rattle Clips
16	Shoe Return Spring
17	Brake Shoe Rollers
18	Brake Shoe Anchor Pins
19	Support Plate
20	Backing Plate
21	Anchor Pin Washer
22	Anchor Pin Nut
23	Dust Shield
24	Shoe Clip Bolt
25	Camshaft Bracket Bolt
26	Clip-to-Backing Plate Nut
27	Dust Shield Capscrew
28	Dust Shield Nut

Cast Plus™ Cam Brake

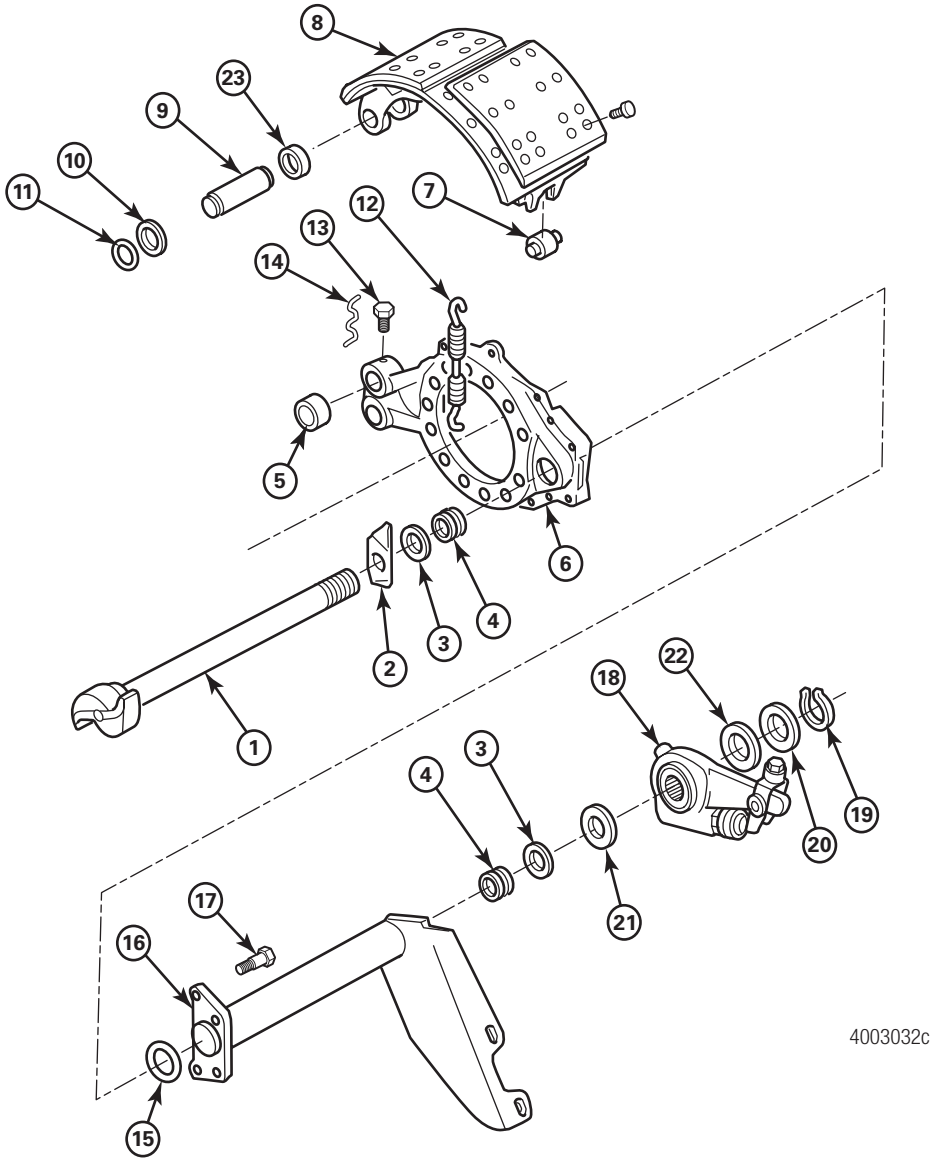

Item	Description
1	Camshaft
2	Cam Head Washer
3	Camshaft Seal
4	Camshaft Bushing
5	Anchor Pin Bushing
6	Brake Spider
7	Brake Shoe Roller
8	Brake Shoe and Lining Assembly
9	Anchor Pin
10	Anchor Pin Washer
11	Anchor Pin Snap Ring
12	Brake Shoe Return Spring
13	Anchor Pin Set Screw
14	Anchor Pin Set Screw Lock Wire
15	Chamber Bracket Seal
16	Chamber Bracket
17	Chamber Bracket Capscrew
18	Slack Adjuster
19	Snap Ring
20	Thick Camshaft Spacing Washer
21	Thick Camshaft Thrust Washer
22	Thin Camshaft Spacing Washer
23	Shoe Bushing

16.5-Inch P Series Cam Brakes

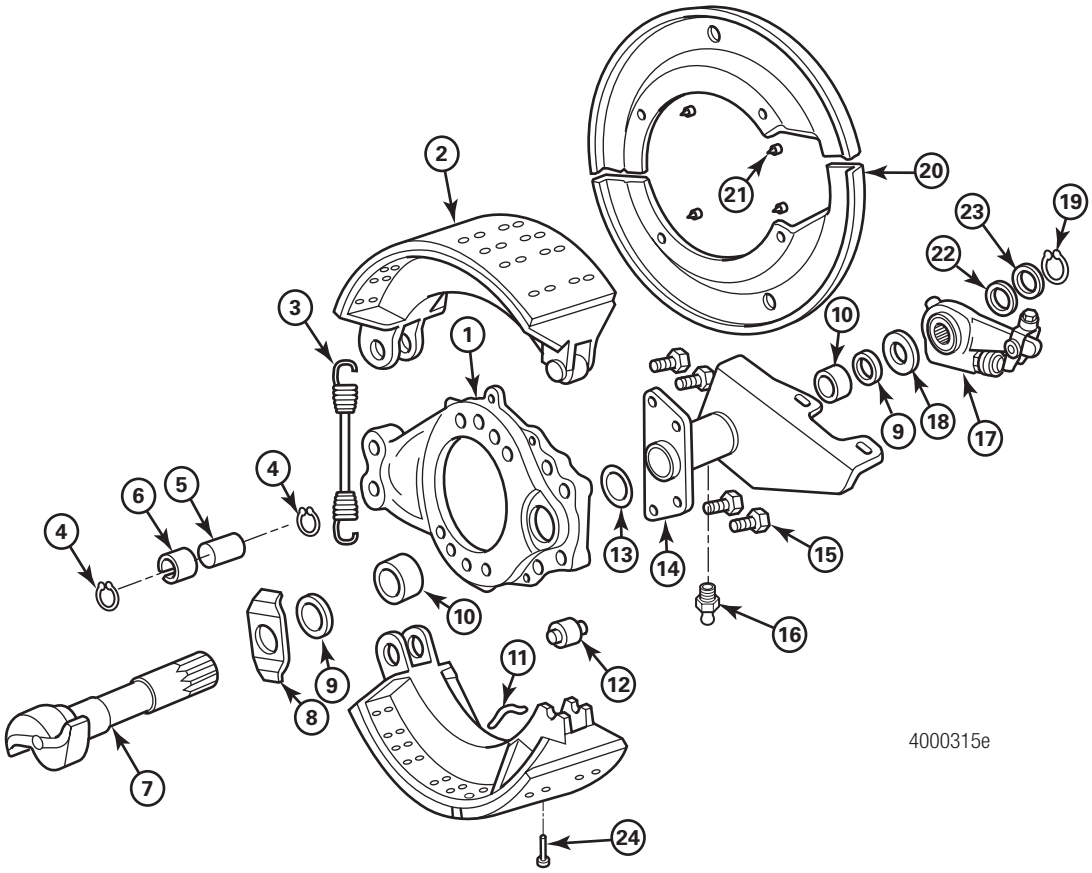

Item	Description
1	Brake Spider
2	Shoe and Lining Assembly
3	Brake Shoe Return Spring
4	Anchor Pin Snap Ring
5	Brake Shoe Anchor Pin
6	Anchor Pin Bushing
7	“S” Head Camshaft
8	Cam Head Washer
9	Camshaft Grease Seal
10	Camshaft Bushing
11	Return Spring Pin
12	Cam Roller
13	Camshaft Bracket Seal
14	Camshaft and Chamber Bracket

Item	Description
15	Camshaft Bracket Capscrew
16	Grease Fitting
17	Automatic Slack Adjuster
18	Thick Camshaft Thrust Washer
19	Camshaft Snap Ring
20	Dust Shield
21	Dust Shield Capscrew
22	Thin Camshaft Spacing Washer
23	Thick Camshaft Spacing Washer
24	Lining Wear Sensor, If Equipped

15-Inch T Series Cam Brakes

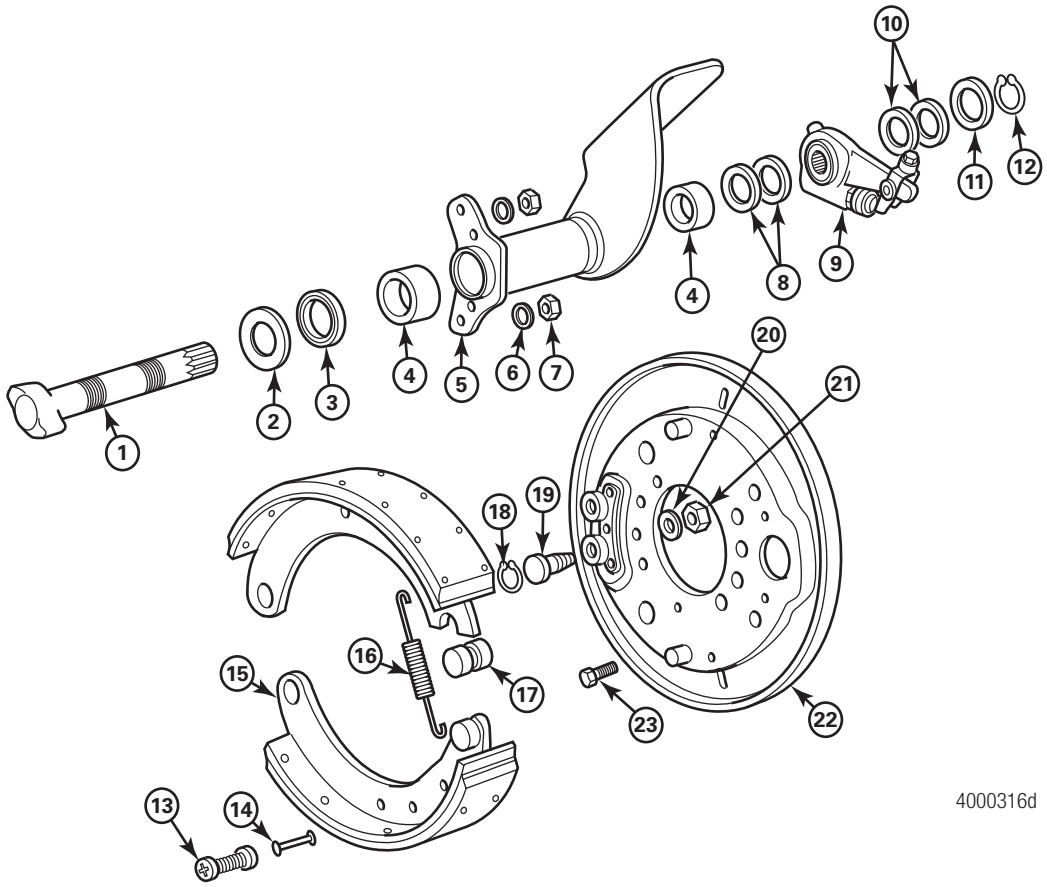

Item	Description
1	Camshaft
2	Cam Head Washer
3	Camshaft Grease Seal
4	Bushing
5	Camshaft and Chamber Bracket
6	Bracket Lock Washer
7	Bracket Nut
8	Thick Camshaft Thrust Washers
9	Automatic Slack Adjuster
10	Thin Camshaft Spacer Washer
11	Thick Camshaft Hardened Washer
12	Camshaft Snap Ring
13	Anti-Rattle Spring Retainer Assembly

Item	Description
14	Anti-Rattle Rod
15	Shoe and Lining Assembly
16	Shoe Return Spring
17	Brake Shoe Roller
18	Anchor Pin Snap Ring
19	Brake Shoe Anchor Pin
20	Anchor Pin Washer
21	Anchor Pin Nut
22	Backing Plate
23	Camshaft Bracket Capscrew

Automatic Slack Adjusters

Cutaway View

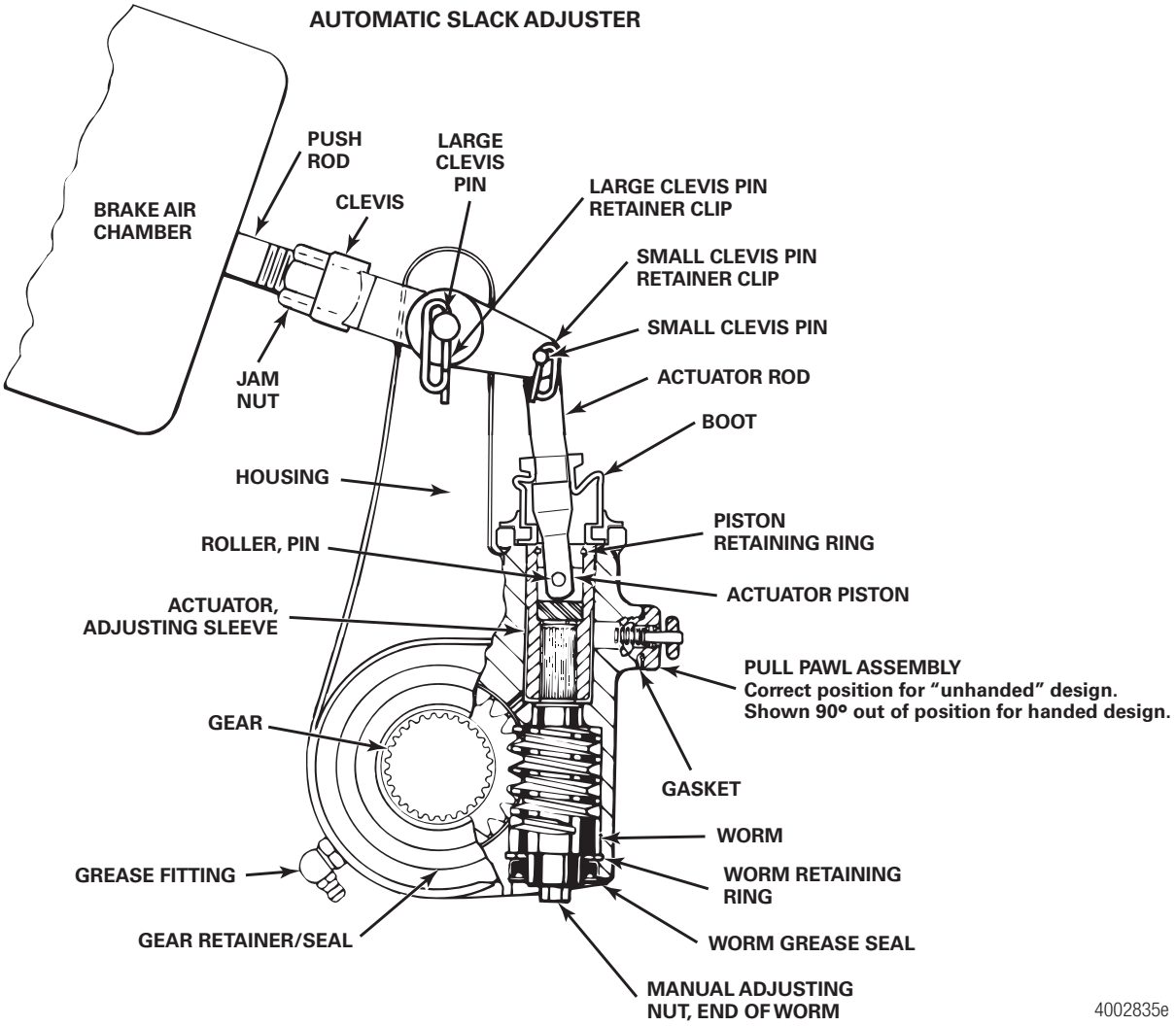

Offset Clevis with Helper Spring

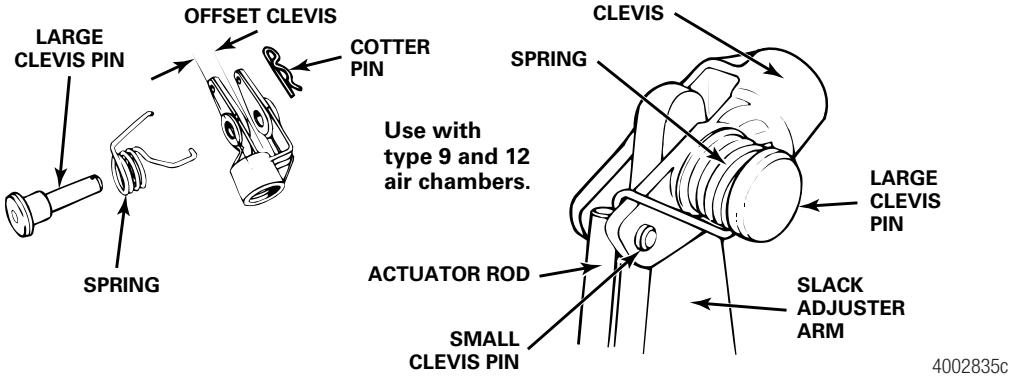

Components and Operation

Cam Brakes

Cam brakes are air-operated brakes — and the type of brake that is most commonly used in the commercial vehicle market. A cam brake consists of an air brake chamber and bracket, automatic slack adjuster, S-camshaft, brake hardware, shoes and linings, spider and brake drum.

At brake actuation, the S-cam rotates and pushes rollers located on the brake shoes against the brake drum. When a brake shoe is forced into the drum, friction slows the movement of the drum to stop the vehicle.

Air Brake Chambers

The vehicle supplies air to the brake system. When you push the brake pedal, a valve activates that uses compressed air to apply the brakes through the air brake chamber at each wheel end. Air brake chambers are specified by size for a particular brake and axle load. For example, a lightly-loaded steering axle might use a small chamber, while a heavily-loaded drive axle would use a larger chamber.

An air chamber also has a limited stroke movement, which is why maintaining cam brake adjustment is critical. The commercial vehicle industry uses two types of air brake chambers: the standard-stroke chamber and the long-stroke chamber.

Automatic Slack Adjusters

To adjust the brake as it wears, and help ensure the air brake chamber can produce enough actuation force, an automatic slack adjuster adjusts the amount of slack, or free play, in the brake. This adjustment is critical in air brakes, because with too little slack, the brake may drag and overheat. If there is too much slack, the brake may not generate enough braking effort to safely stop the vehicle.

Spring Brake Chambers

An air brake system requires parking brakes and emergency braking if the air system malfunctions; for example, if an air line ruptures. When the spring brake activates, air pressure is released from the spring brake chamber, which uses mechanical spring pressure as a braking force. The spring brake can be actuated automatically by low pressure, or it can be controlled mechanically to use as a parking brake.

Cam Brake Models

Q Plus™ Cam Brakes

Q Plus™ cam brakes are designed with an S-camshaft, heavy-duty return springs and thicker linings. Q Plus™ brakes are compatible with Meritor Q Series brakes on tractors and trailers. Figure 2.1.

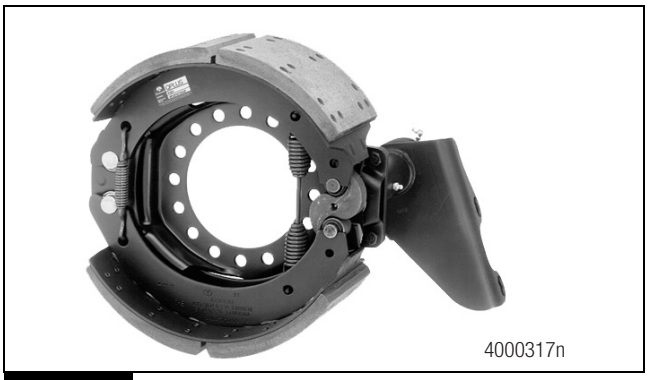

Figure 2.1

Q Plus™ LX500 and MX500 Cam Brakes

Q Plus™ LX500 cam brakes include an Extended Lube Feature to help reduce wear and maintenance. Q Plus™ MX500 cam brakes include a Long Life package that requires no lubrication or lining maintenance. Both brakes include factory-installed automatic slack adjusters. Figure 2.2.

For complete maintenance and service information for Q Plus™ LX500 and MX500 cam brakes, refer to Maintenance Manual MM-96173, Q Plus™ LX500 and MX500 Cam Brakes. To obtain this publication, refer to the Service Notes page on the front inside cover of this manual.

Figure 2.2

Cast Plus™ Cam Brakes

Cast Plus™ cam brakes use single-piece cast shoes and thicker linings, which provide resistance to heat-related wear in heavy-duty coach and off-road applications. Figure 2.3.

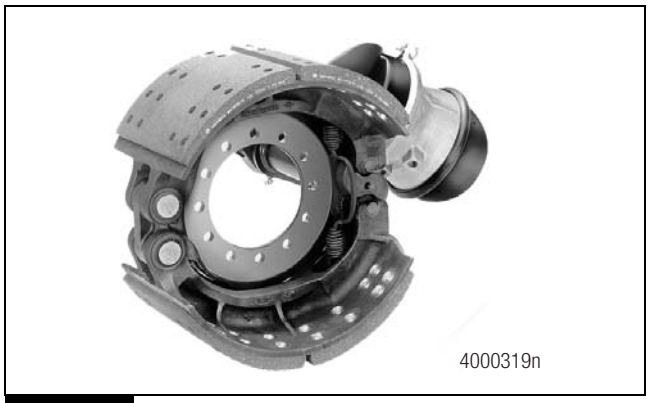

Figure 2.3

Q Series Cam Brakes

Q Series cam brakes are equipped with open anchor pins for quick change service. Q Series brakes are compatible with Meritor Q Plus™ brakes on tractors and trailers. Figure 2.4.

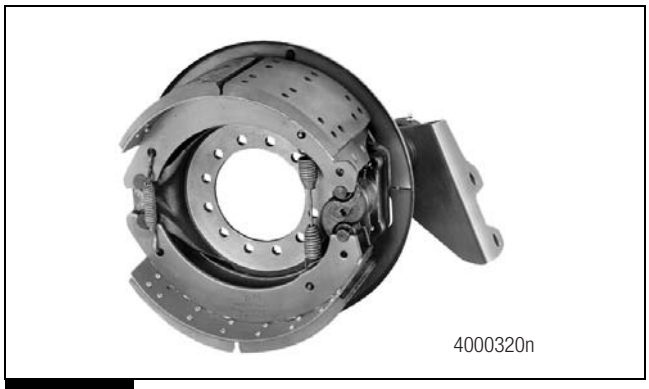

Figure 2.4

P Series

P Series cam brakes are available in 16.5- and 18-inch diameters, with 7-inch wide cast shoes and 0.75-inch tapered brake linings. Figure 2.5.

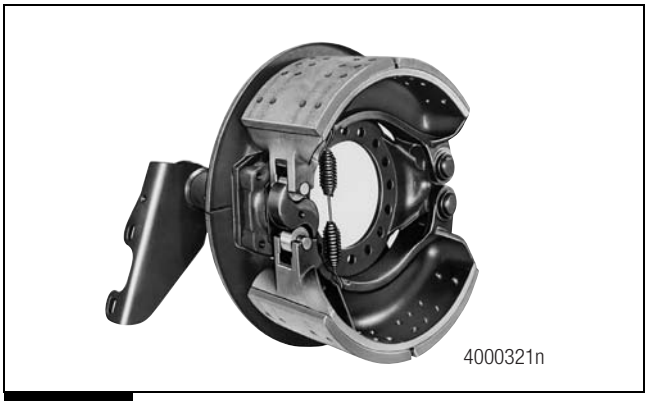

Figure 2.5

Converting 16.5-Inch Q Series Brakes to the Q Plus™ Brake Design

Meritor replaced the Q camshaft with the Q Plus™ camshaft in all 16.5-inch Q Series brakes manufactured since 1994. You can convert 16.5-inch Q Series brakes manufactured before 1994 to the Q Plus™ brake design by changing the shoe and lining assembly, the shoe return spring and the camshaft. Meritor recommends you install a new camshaft bushing whenever you replace a camshaft.

However, major design differences — brake offset, single-web versus double-web shoes, a backing plate versus a brake spider, differences in camshaft diameters and splines — will not allow you to convert 15-inch Q Series brakes to the Q Plus™ design by replacing individual parts. Also refer to Figure 2.6.

In addition, replacing an entire 15-inch Q Series brake assembly with a 15-inch Q Plus™ brake assembly also could require a different drum, depending on the original equipment manufacturer (OEM) and the brand of drum installed with the Q Series brakes.

How to Identify Q Plus™ and Q Series Cam Brakes

Differences Between the Brakes

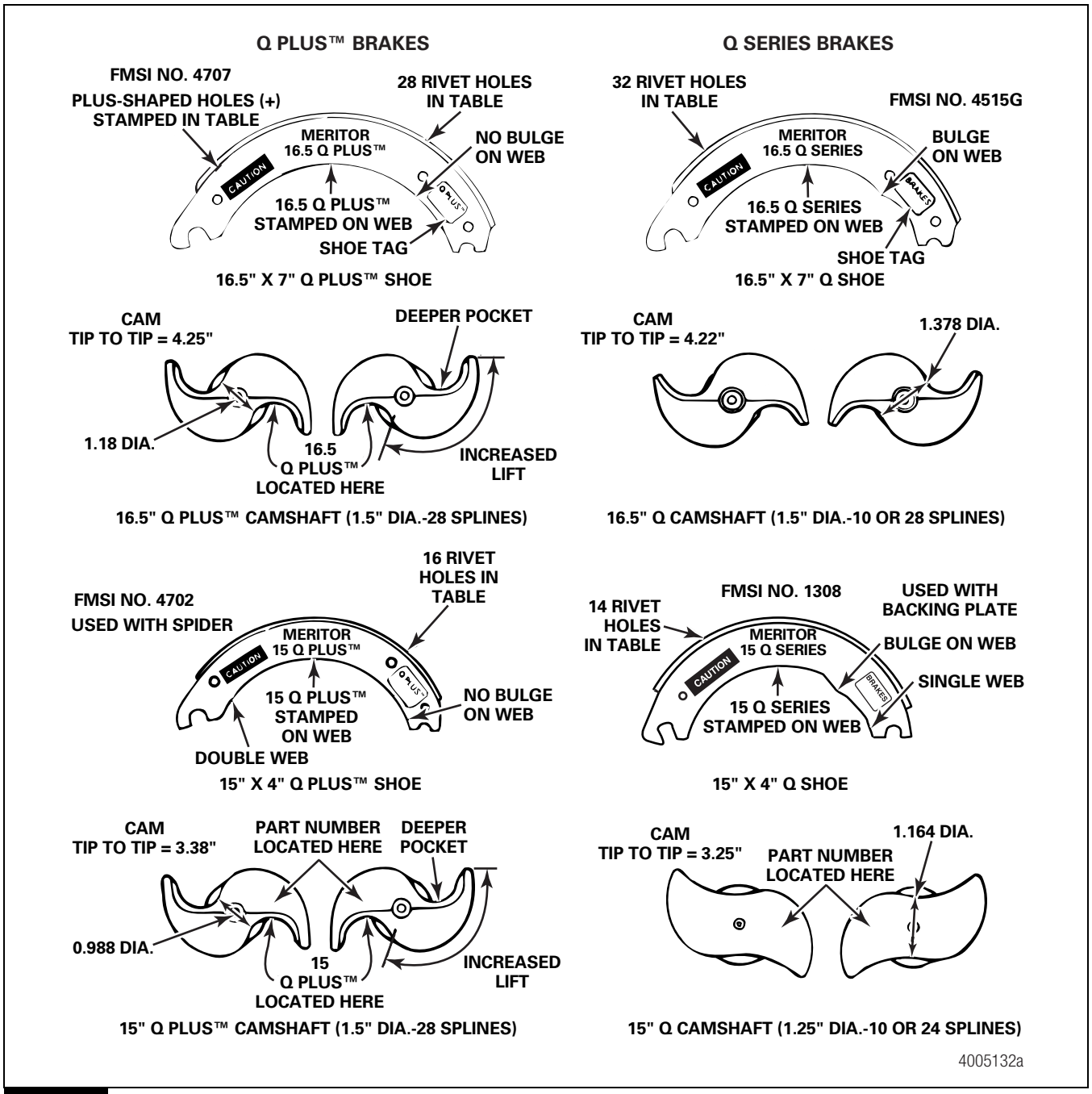

Figure 2.6

Important Information

Meritor automatic slack adjusters (ASAs) should not need to be manually adjusted in service. ASAs should not have to be adjusted to correct excessive push rod stroke. The excessive stroke may be an indication that a problem exists with the foundation brake, ASA, brake actuator or other system components.

Meritor recommends troubleshooting the problem, replacing suspect components and then confirming proper brake operation prior to returning the vehicle into service.

In the event that a manual adjustment must be made (although not a common practice), a service appointment and full foundation brake, ASA, and other system component inspection should be conducted as soon as possible to ensure integrity of the overall brake system.

For Meritor brake adjustment, refer to the brake adjustment tables in this manual. For non-Meritor brake adjusters, refer to the brake manufacturer's service procedures.

Automatic Slack Adjusters

Since January 1993, some parts of Meritor automatic slack adjusters are not serviceable or interchangeable with parts from earlier models. Refer to Section 1 for more information.

Never mix automatic slack adjusters on the same axle. Always use replacement parts that were originally designed for the brake system to help ensure maximum brake performance.

How an Automatic Slack Adjuster Works

When you install an automatic slack adjuster, you set the brake chamber stroke measurement, which is the correct shoe-to-drum clearance. Figure 2.7. When linings wear, this clearance increases, and the air chamber push rod must travel farther to apply the brakes.

When this happens, the slack adjuster will automatically adjust during the return stroke to maintain the correct shoe-to-drum clearance. If the air brake chamber push rod stroke is within limits during operation, no adjustment occurs.

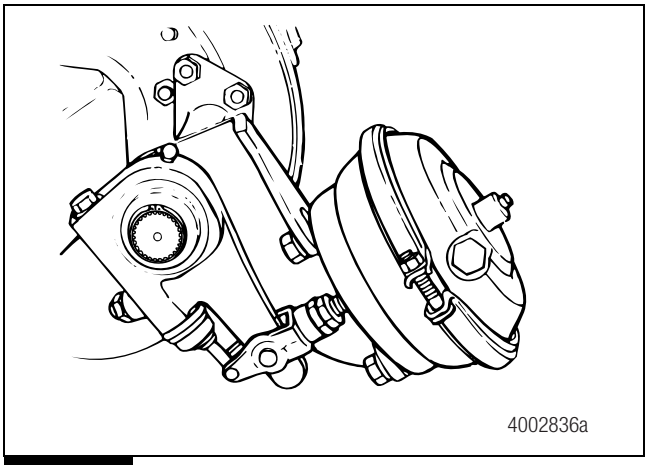

Figure 2.7

Factory-Installed Automatic Slack Adjusters on Q Plus™ LX500 and MX500 Cam Brake Packages

Q Plus™ LX500 and MX500 brake packages include factory-installed automatic slack adjusters that do not have grease fittings, and lubrication intervals differ from conventional slack adjusters. Refer to Maintenance Manual MM-96173, Q Plus™ LX500 and MX500 Cam Brakes, for complete information. To obtain this publication, refer to the Service Notes page on the front inside cover of this manual.

Handed and Unhanded Slack Adjusters

There are two automatic slack adjuster designs: handed and unhanded. Handing refers only to the location of the pawl, which is used for clearance issues on the vehicle. For most applications, install a handed automatic slack adjuster so that the pawl faces INBOARD on the vehicle.

The pawl can be on either side or on the front of the slack adjuster housing. Figure 2.8.

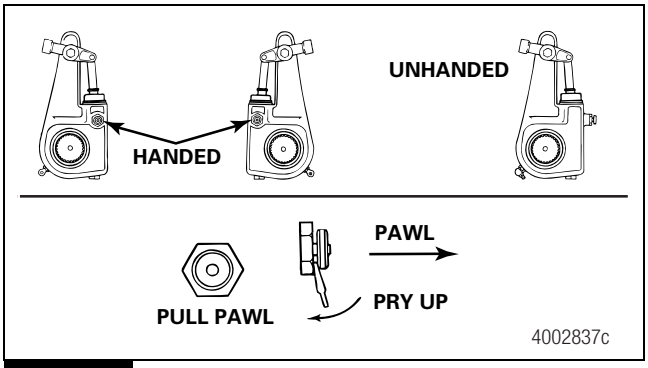

Figure 2.8

Pull Pawls

Pull pawls are spring loaded. Pry the pull pawl at least 1/32-inch to disengage the teeth. Figure 2.8. When you remove the pry bar, the pull pawl will re-engage automatically.

Clevis Types and Thread Sizes

A one-piece, threaded clevis is standard equipment on most Meritor automatic slack adjusters, including factory-installed slack adjusters on Q Plus™ LX500 and MX500 cam brakes, and all service replacement parts.

Meritor automatic slack adjusters and clevises are designed to be used as a system. Always use genuine Meritor replacement parts. Although parts from other manufacturers can look the same, differences can exist that will affect brake system performance.

The threaded-type clevis is available in two different pin spacings, 1.30-inches (33 mm) and 1.38-inches (35 mm). Figure 2.9.

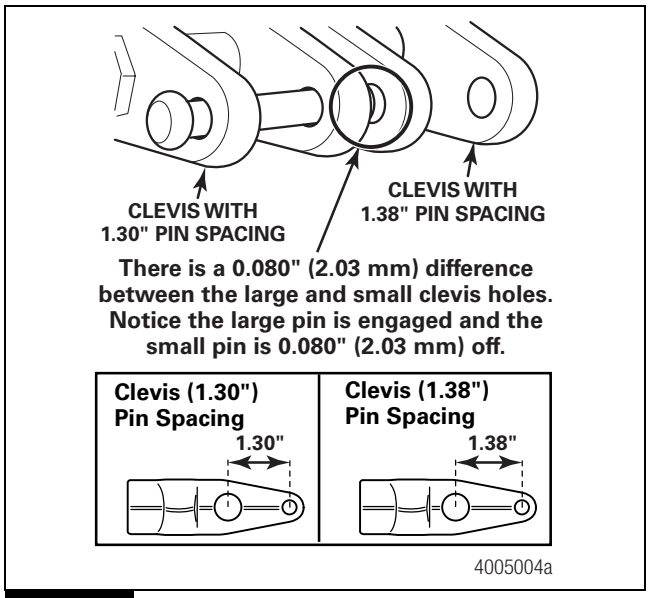

Figure 2.9

The initial slack adjuster set-up is unique for each pin spacing. Refer to Table E for correct installation.

Threaded Clevis for Straight or Offset Applications

A threaded clevis can be either straight or offset. If service replacement is required, replace a straight clevis with a straight clevis and an offset clevis with an offset clevis to maintain the correct brake design and set up. Figure 2.10.

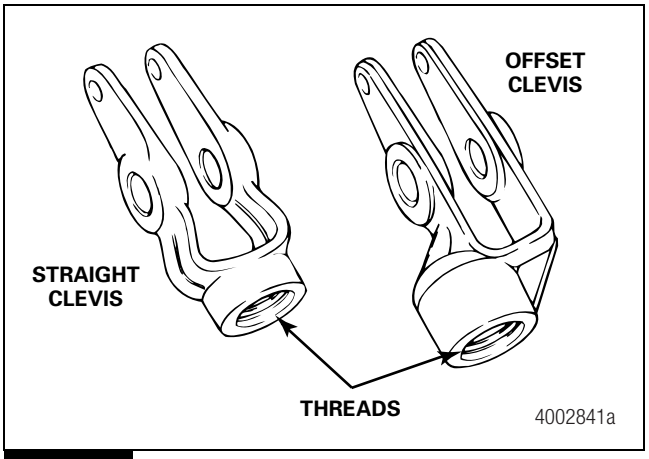

Figure 2.10

Thread Sizes

Straight and offset clevis designs are available in two common thread sizes to match push rod threads.

Table A: Thread Sizes

Chambers	Thread Sizes
9, 12, 16	1/2"-20 UNF
20, 24, 30, 36	5/8"-18 UNF

Meritor Automatic Slack Adjusters are Color-Coded to Brake Type and Air Chamber Size

Meritor uses either black, red, yellow, green or blue to color-code an automatic slack adjuster's internal actuator piston according to brake type and air chamber size.

Meritor uses a mylar tag on the body of the current-design slack adjuster to identify the color of the internal actuator piston.

Mylar Tag — Current Design

A mylar tag is attached to the current-design slack adjuster with a press-in boot. The color of the actuator piston is printed on the mylar tag. Figure 2.11.

Color-Coded Tie Wrap — Previous Design

On previous-design slack adjusters, a color-coded tie wrap attaches the boot to the slack adjuster body. The tie wrap color matches the color of the actuator piston. Figure 2.11.

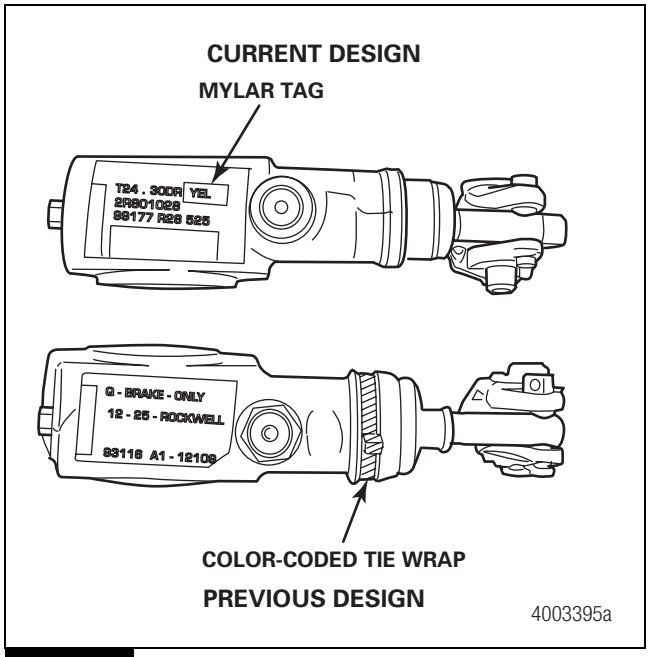

Figure 2.11

Important Note

While in service, it is possible that the boot's tie wrap might have been replaced with a tie wrap of a different color than originally installed at manufacture. If this happens, the tie wrap will not correctly identify the brake type and air chamber size.

Meritor recommends that you remove the boot from the slack adjuster to determine the color of the actuator piston, which identifies the brake type and air chamber size.

For a complete color-coding list, refer to Parts Catalog PB-8857, Brake, Trailer Axle and Wheel Attaching Parts. To obtain this publication, refer to the Service Notes page on the front inside cover of this manual.

When You Replace an Automatic Slack Adjuster

The original equipment manufacturer paints the chassis and slack adjusters, which includes the mylar tag or tie wrap, depending on the slack adjuster model.

When you replace an automatic slack adjuster, the color of the actuator piston on the new slack adjuster must match the color of the actuator piston on the in-service slack adjuster you'll replace.

Check the mylar tag or color-coded tie wrap, or remove the boot as described below, to identify the color of the actuator piston. To ensure a correct installation, this color must match the color of the actuator piston on the in-service slack adjuster you'll replace.

- **If you are unsure of the color of the actuator piston on the in-service slack adjuster:** Remove the piston boot to see the color of the actuator piston to ensure a correct installation. The color must be the same as the new slack adjuster you'll install.

For a complete color-coding list, refer to Parts Catalog PB-8857, Brake, Trailer Axle and Wheel Attaching Parts. To obtain this publication, refer to the Service Notes page on the front inside cover of this manual.

Hazard Alert Messages

Read and observe all Warning and Caution hazard alert messages in this publication. They provide information that can help prevent serious personal injury, damage to components, or both.

⚠ WARNING

To prevent serious eye injury, always wear safe eye protection when you perform vehicle maintenance and service.

⚠ ASBESTOS AND NON-ASBESTOS FIBERS WARNING

Some brake linings contain asbestos fibers, a cancer and lung disease hazard. Some brake linings contain non-asbestos fibers, whose long-term effects to health are unknown. You must use caution when you handle both asbestos and non-asbestos materials.

Removal

Wheel Components

⚠ WARNING

Park the vehicle on a level surface. Block the wheels to prevent the vehicle from moving. Support the vehicle with safety stands. Do not work under a vehicle supported only by jacks. Jacks can slip or fall over. Serious personal injury and damage to components can result.

1. Park the vehicle on a level surface. Block the wheels to prevent the vehicle from moving.
2. Use a jack to raise the vehicle so that the wheels to be serviced are off the ground. Support the vehicle with safety stands.

⚠ WARNING

Before you service a spring chamber, carefully follow the manufacturer's instructions to compress and lock the spring to completely release the brake. Verify that no air pressure remains in the service chamber before you proceed. Sudden release of compressed air can cause serious personal injury and damage to components.

3. If the brake has spring chambers, carefully cage and lock the spring, so that it can't actuate during assembly. Follow the chamber manufacturer's instructions to completely release the brake.
4. Verify that no air pressure remains in the service chamber. Sudden release of pressurized air can cause serious personal injury and damage to components.

Automatic Slack Adjuster

The Slack Adjuster Was Not Manufactured by Meritor

Refer to the slack adjuster manufacturer's service procedures.

The Slack Adjuster Was Manufactured by Meritor

⚠ CAUTION

You must disengage a pull pawl before rotating the manual adjusting nut, or you will damage the pawl teeth. A damaged pawl will not allow the slack adjuster to automatically adjust brake clearance. Replace damaged pawls before putting the vehicle in service.

1. Disengage the pull pawl. Use a screwdriver or equivalent tool to pry the pull pawl at least 1/32-inch (0.8 mm) to disengage the teeth from the actuator. Figure 3.1.

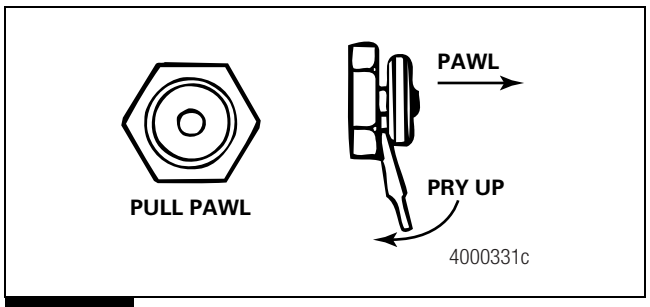

Figure 3.1

2. Use a wrench to turn the manual adjusting nut CLOCKWISE until the brake shoes are fully retracted, and the lining clears the drum. Figure 3.2.

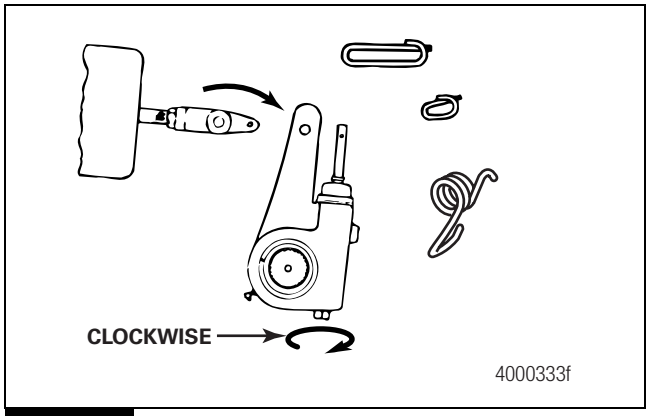

Figure 3.2

⚠ WARNING

When you remove a clevis pin that has a spring, hold the spring with pliers. The spring can disengage from the clevis with enough force to cause serious personal injury.

⚠ CAUTION

Always replace used clevis pin retainer clips with new ones when you service an automatic slack adjuster or air chamber. Do not reuse retainer clips. When you remove a retainer clip, it can bend out of shape and lose retention. Damage to components can result.

3. Remove both clevis pins, and retainer clips or cotter pins. Move the slack adjuster away from the clevis. Discard the retainer clips and cotter pins and replace them with new ones.
4. Follow the manufacturer's instructions to remove the wheel and drum from the axle.

Brake Shoes

All Q Plus™ and Q Series 15-Inch and 16.5-Inch Brakes

1. Push DOWN on the bottom brake shoe. Pull on the brake shoe roller retainer clip to remove the bottom roller. Figure 3.3.

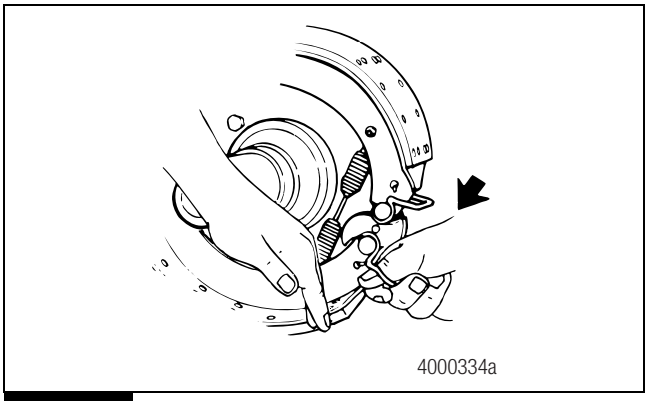

Figure 3.3

2. Lift the top brake shoe and pull on the brake shoe roller retainer clip to remove the top roller.
3. Lift the bottom shoe to release the tension on the brake shoe return spring. Figure 3.4.

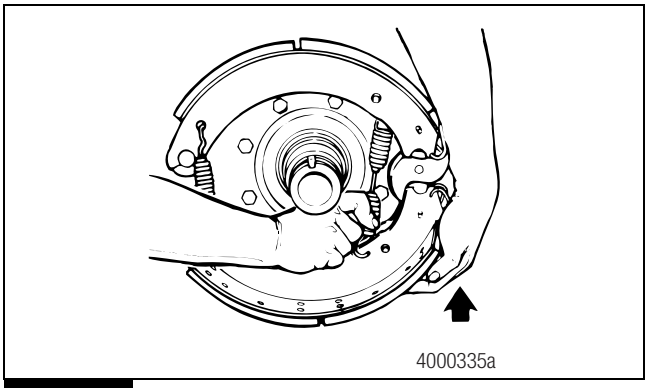

Figure 3.4

4. Rotate the bottom shoe to release the tension on the brake shoe retainer springs. Figure 3.5.

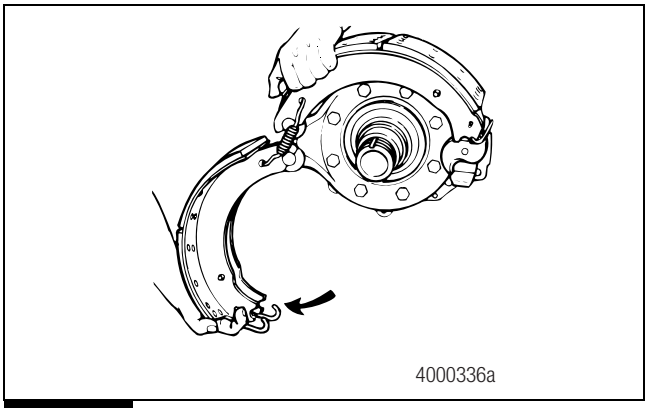

Figure 3.5

5. Remove the shoe retainer springs and the brake shoes.
6. Use the correct bushing driver tool to remove the anchor pin bushings from the spider.

P Series and Cast Plus™ Brakes

Some trailer axle P Series brakes have anchor pins that are secured with lock pins. Use a steel rod to make a tool to drive out the lock pins. Figure 3.6. The current anchor pin arrangement is shown in Figure 3.7. Earlier P Series brakes can include additional parts.

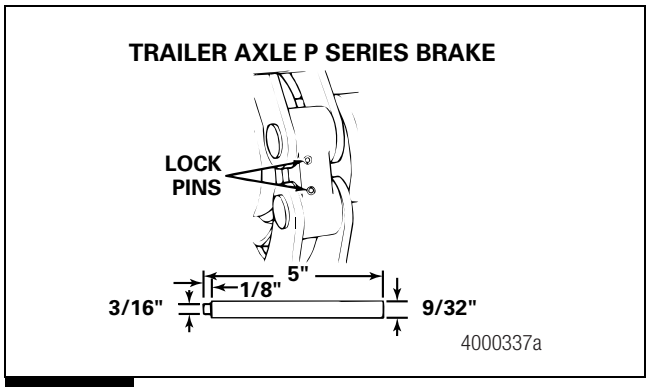

Figure 3.6

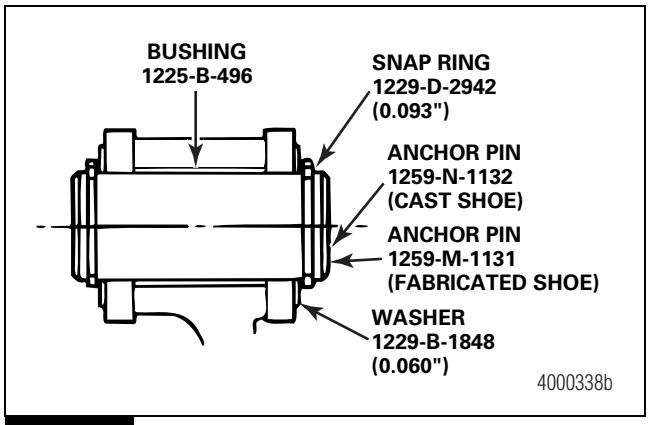

Figure 3.7

1. Remove the anchor pin snap ring, washer, retainer, felts, seals or capscrews as required.

⚠ WARNING

Use a brass or synthetic mallet for assembly and disassembly procedures. Do not hit steel parts with a steel hammer. Pieces of a part can break off. Serious personal injury and damage to components can result.

2. Use a brass drift to remove the top anchor pin. Figure 3.8.

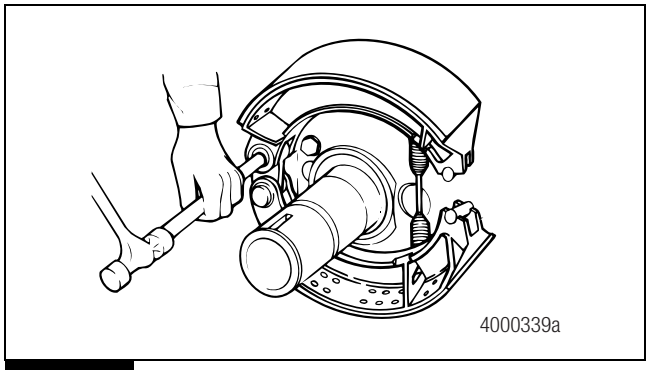

Figure 3.8

3. Rotate the top shoe to release the tension on the brake shoe return spring. Remove the shoe. Figure 3.9.

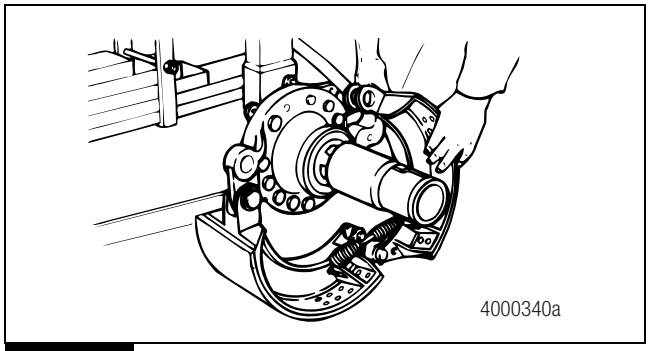

Figure 3.9

4. Use a brass drift to remove the bottom anchor pin. Remove the bottom shoe. If necessary, remove the rollers. Figure 3.10.

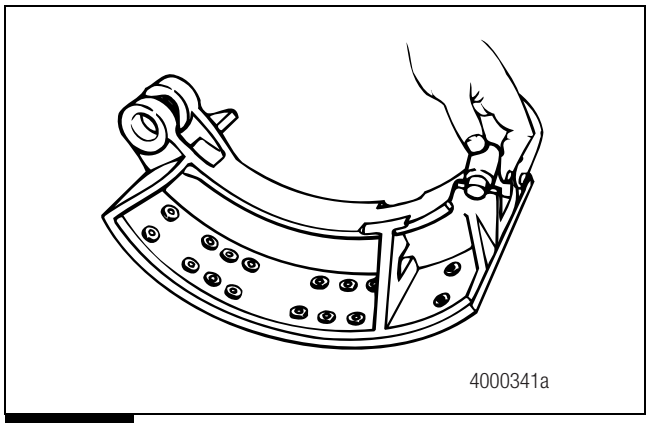

Figure 3.10

T Series Cam Brakes

1. Remove the anti-rattle spring retainer and spring from the anti-rattle rod.
2. Push DOWN on the bottom brake shoe to provide enough clearance to remove the bottom brake shoe roller. Remove the roller.
3. Lift the top brake shoe. Remove the top brake shoe roller. Remove the anchor pin snap ring and the anchor pin.
4. Rotate the bottom shoe to release the tension on the brake shoe retainer springs. Remove the shoe retainer springs and the brake shoes.

Check the Camshaft Bushing for Wear

Verify That Cam-to-Bushing Free Play is Within Specification

1. Before you remove the automatic slack adjuster and camshaft, verify that cam-to-bushing radial free play is within specification. Figure 3.11. Because the bushing wears in one direction, it is important to rotate the camshaft in all directions when you check for radial free play.

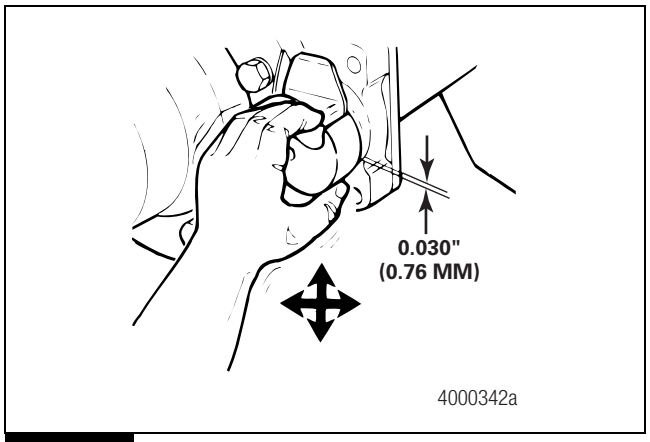

Figure 3.11

2. Use a dial indicator to verify that cam-to-bushing free play is 0.030-inch (0.76 mm) or less.
   - **If radial free play is less than 0.030-inch (0.76 mm):** Do not replace the bushings and seals.
   - **If radial free play is more than 0.030-inch (0.76 mm):** Replace the bushings and seals.

Removal

Automatic Slack Adjuster from the Camshaft

1. Remove the snap ring, washers and spacers from the camshaft.
2. Remove the slack adjuster from the camshaft.
3. Remove the camshaft from the spider.
   - **If the camshaft bushings and seals are replaced:** Use the following procedure.
     A. Use a seal removal tool to remove the inner and outer camshaft seals.
     B. Use the correct bushing puller tool to remove the inner and outer camshaft bushings.

⚠ CAUTION

You must turn the adjusting nut COUNTERCLOCKWISE when you check gear torque on an automatic slack adjuster. If you turn the adjusting nut incorrectly, you will damage the pawl teeth. A damaged pawl will prevent the slack adjuster from automatically adjusting the clearance between the linings and drum. Damage to components can result.

4. Check the slack adjuster gear torque. Use a lb-in torque wrench and turn the adjusting nut COUNTERCLOCKWISE (Figure 3.12) to rotate the gear 360 degrees, or 22 turns of the wrench, as you read the torque scale on the wrench. The value should be less than 45 lb-in (5 N•m) as you rotate the gear.
   - **If the torque value is less than 45 lb-in (5 N•m) as you rotate the gear:** The slack adjuster is operating correctly.
   - **If the torque value exceeds 45 lb-in (5 N•m) as you rotate the gear:** Replace the slack adjuster.

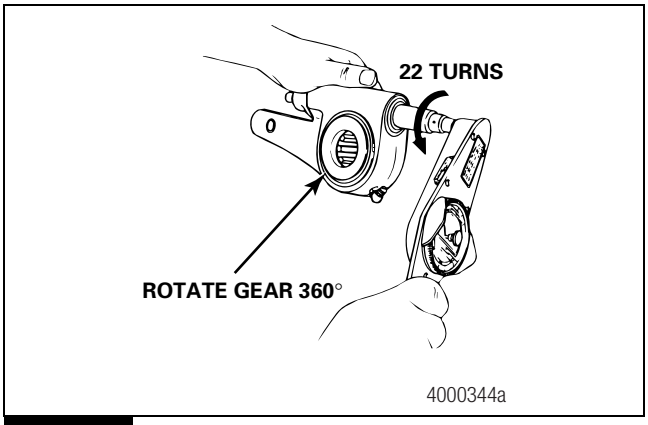

Figure 3.12

Disassembly

Automatic Slack Adjuster

1. Use a punch and hammer to tap the metal boot retaining ring from the slack adjuster housing.
2. Remove the boot from the housing. Pull the actuator assembly from the housing. Figure 3.13. Discard the boot, and install a new boot when you assemble the slack adjuster.

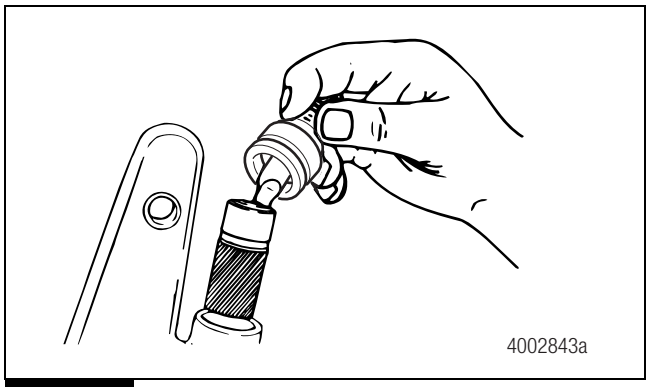

Figure 3.13

3. Use a small screwdriver to push down on one side of the piston retaining ring to force the ring out of the groove. Figure 3.14.

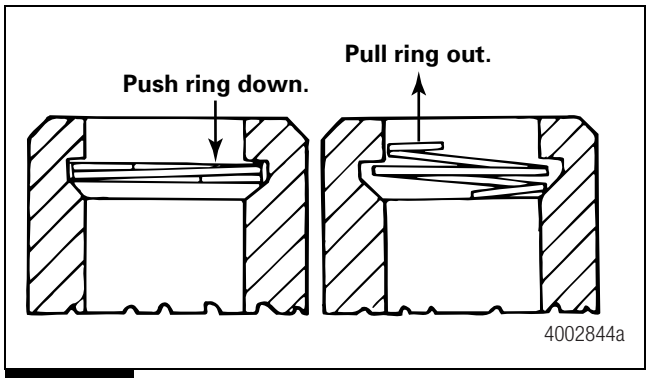

Figure 3.14

4. Extend the coils of the ring. Use pliers to unwind the ring and pull it out of the groove. Use a new ring when you assemble the slack adjuster. Figure 3.14.
5. Pull the actuator rod, piston and pin from the actuator.
6. Remove the pin from the rod and piston, if necessary. Figure 3.15.

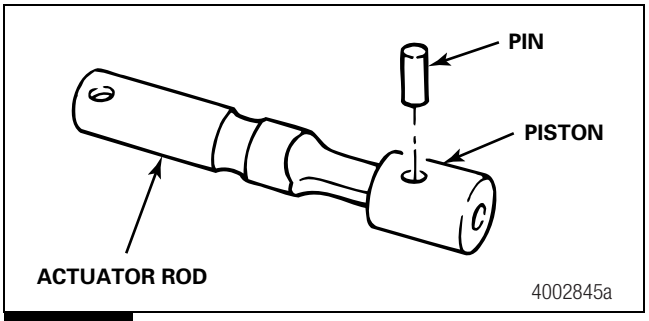

Figure 3.15

7. Inspect the clevis bushing in the slack adjuster arm for wear or damage. Replace a worn or damaged bushing. Check the bushing's diameter to ensure it does not exceed 0.531-inch (13.5 mm). Figure 3.16.
   - **If the bushing's diameter exceeds 0.531-inch (13.5 mm):** Replace the bushing.

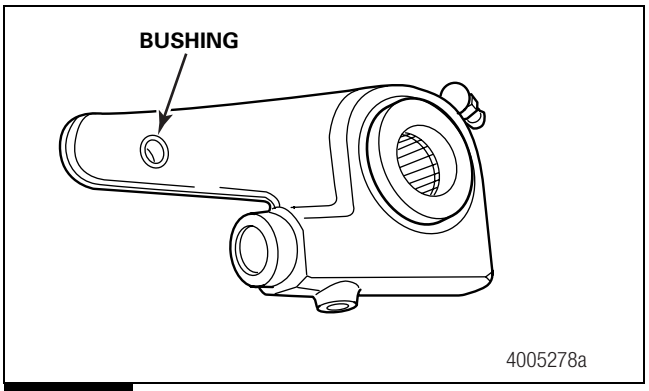

Figure 3.16

8. Use a small screwdriver to remove the grease seal from around the worm bore. Figure 3.17. Discard the seal. Install a new seal when you assemble the slack adjuster.

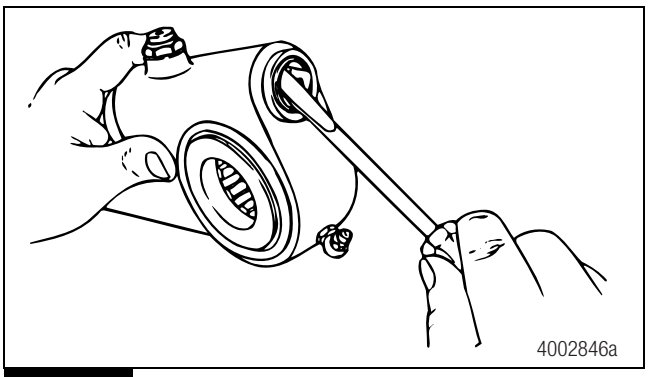

Figure 3.17

Hazard Alert Messages

Read and observe all Warning and Caution hazard alert messages in this publication. They provide information that can help prevent serious personal injury, damage to components, or both.

⚠ WARNING

To prevent serious eye injury, always wear safe eye protection when you perform vehicle maintenance or service.

⚠ ASBESTOS AND NON-ASBESTOS FIBERS WARNING

Some brake linings contain asbestos fibers, a cancer and lung disease hazard. Some brake linings contain non-asbestos fibers, whose long-term effects to health are unknown. You must use caution when you handle both asbestos and non-asbestos materials.

Clean, Dry and Inspect Parts

⚠ WARNING

Solvent cleaners can be flammable, poisonous and cause burns. Examples of solvent cleaners are carbon tetrachloride, and emulsion-type and petroleum-base cleaners. Read the manufacturer's instructions before using a solvent cleaner, then carefully follow the instructions. Also follow the procedures below.

- **Wear safe eye protection.**
- **Wear clothing that protects your skin.**
- **Work in a well-ventilated area.**
- **Do not use gasoline, or solvents that contain gasoline. Gasoline can explode.**
- **You must use hot solution tanks or alkaline solutions correctly. Read the manufacturer's instructions before using hot solution tanks and alkaline solutions. Then carefully follow the instructions.**

⚠ CAUTION

Do not use hot solution tanks or water and alkaline solutions to clean ground or polished parts. Damage to parts can result.

Use soap and water to clean non-metal parts.

Dry parts immediately after cleaning with soft, clean paper or cloth, or compressed air.

Corrosion Protection

If you assemble the parts immediately after you clean them, lubricate the parts with grease to prevent corrosion. Parts must be clean and dry before you lubricate them.

If you store the parts after you clean them, apply a corrosion-preventive material. Store the parts in a special paper or other material that prevents corrosion.

Inspect Parts

Brakes

Check the spider for expanded anchor pin holes and for cracks. Replace damaged spiders and anchor pin bushings.

Check the camshaft bracket for broken welds, cracks and correct alignment. Replace damaged brackets.

Check the anchor pins for corrosion and wear. Replace worn or damaged anchor pins.

Check the brake shoes for rust, expanded rivet holes, broken welds and correct alignment. Replace a shoe with any of the above conditions.

1. For 16.5-inch brake shoes only, anchor pin holes must not exceed 1.009-inches (25.63 mm) in diameter. The distance from the center of the anchor pin hole to the center of the roller hole must not exceed 12.779-inches (32.46 cm). Replace brake shoes with measurements that do not meet specifications. Figure 4.1.
2. For 15-inch brake shoes only, anchor pin holes must not exceed 1.009-inches (25.63 mm) in diameter. The distance from the center of the anchor pin hole to the center of the roller hole must not exceed 11.685-inches (29.68 cm). Replace brake shoes with measurements that do not meet specifications. Figure 4.1.

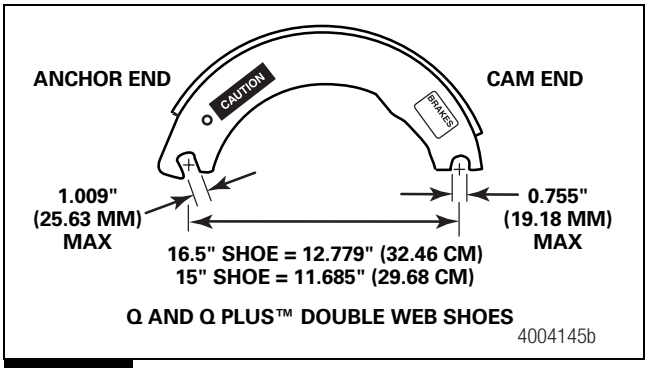

Figure 4.1

Brake Drums

⚠ WARNING

Do not operate the vehicle with the brake drum worn or machined beyond the discard dimension indicated on the drum. The brake system may not operate correctly. Damage to components and serious personal injury can result.

⚠ CAUTION

Replace the brake drum if it is out-of-round. Do not turn or rebore a brake drum, which decreases the strength and capacity of the drum. Damage to components can result.

Check the brake drums for cracks, severe heat checking, heat spotting, scoring, pitting and distortion. Replace drums as required. Do not turn or rebore brake drums, which decreases the strength and heat capacity of the drum. Refer to Maintenance Manual MM-99100, Wheel Equipment, Disc Wheel Hubs, Brake Drum Failure Analysis. To obtain this publication, refer to the Service Notes page on the front inside cover of this manual.

Measure the inside diameter of the drum in several locations with a drum caliper or internal micrometer. Figure 4.2.

- **If the diameter exceeds the specifications supplied by the drum manufacturer:** Replace the drum.

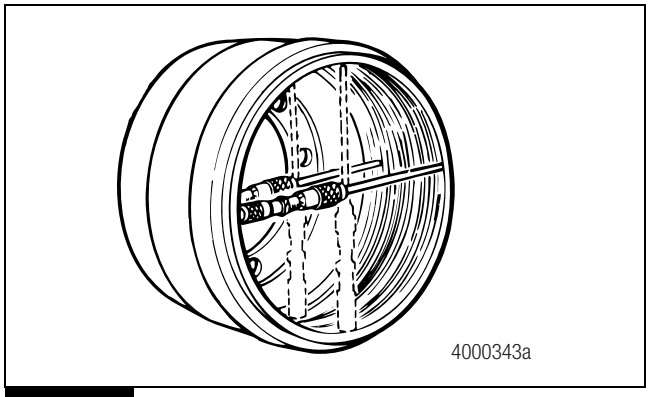

Figure 4.2

Check the dust shields for wear and damage. Repair or replace worn or damaged parts as necessary.

Automatic Slack Adjuster

Inspect the large and small clevis pins and retainer clips for wear and damage. Replace worn or damaged parts.

⚠ CAUTION

You must turn the adjusting nut COUNTERCLOCKWISE when you check gear torque on an automatic slack adjuster. If you turn the adjusting nut incorrectly, you will damage the pawl teeth. A damaged pawl will prevent the slack adjuster from automatically adjusting the clearance between the linings and drum. Damage to components can result.

1. Use a lb-in torque wrench and turn the adjusting nut COUNTERCLOCKWISE (Figure 4.3) to rotate the gear 360 degrees, or 22 turns of the wrench, as you read the torque scale on the wrench. The value should be less than 45 lb-in (5 N•m) as you rotate the gear.
   - **If the torque value is less than 45 lb-in (5 N•m) as you rotate the gear:** The slack adjuster is operating correctly.
   - **If the torque value exceeds 45 lb-in (5 N•m) as you rotate the gear:** Replace the slack adjuster.

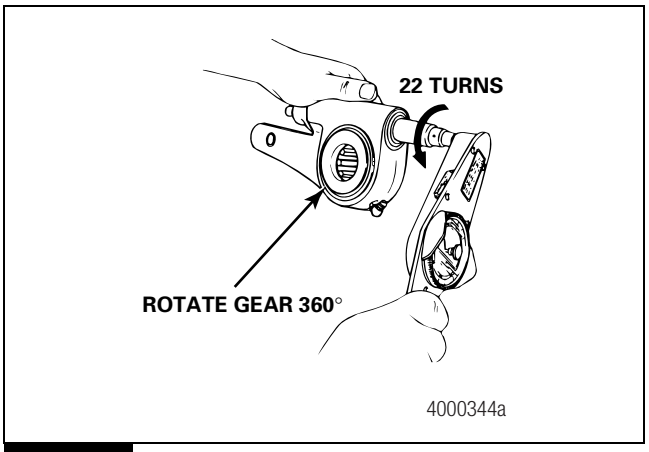

Figure 4.3

⚠ CAUTION

Always replace used clevis pin retainer clips with new ones when you service an automatic slack adjuster or chamber. Do not reuse retainer clips. Discard used clips. When you remove a retainer clip, it can bend or "gap apart" and lose retention. Damage to components can result.

2. Inspect the clevis pin retainer clips for wear and damage. Replace worn or damaged parts. Do not reuse clevis pin retainer clips.
3. Inspect the clevis pins and slack adjuster arm bushing. Replace clevis pins if they are worn or bent. Replace the bushing if its diameter exceeds 0.531-inch (13.5 mm).

4. Inspect the boot assembly. If it is cracked, cut or torn, remove the pull pawl and inspect the areas around the actuator. If you find dirt, solid lubricant or corrosion, replace the slack adjuster. Otherwise, only replace the boot assembly.
5. Use a grease gun to apply Meritor specification O-692 or O-645 lubricant to the slack adjuster grease fitting, until grease flows from around the camshaft splines and pawl assembly. If necessary, install a camshaft into the slack adjuster gear to minimize grease flow through the gear holes.

Camshaft

Check the camshaft for cracks, wear and corrosion. Check the cam head, bearing journals and splines. Replace worn or damaged camshafts.

Install new camshaft bushings and seals whenever you install a new camshaft.

1. Tighten all spider bolts to the correct torque. Figure 4.4.

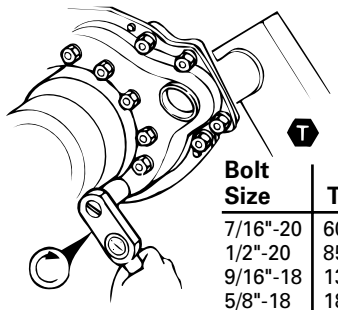

Bolt Size	Torque	
7/16"-20	60-75 lb-ft	81-102 N•m
1/2"-20	85-115 lb-ft	115-156 N•m
9/16"-18	130-165 lb-ft	176-224 N•m
5/8"-18	180-230 lb-ft	244-312 N•m
7/8"-9	440-580 lb-ft	598-789 N•m

4000345a

Figure 4.4

2. Use a seal driver to install new camshaft seals and new bushings into the cast spider and camshaft bracket. Figure 4.5.
   - **If the brake has a stamped spider:** Install both bushings into the bracket. Install the seals with the seal lips toward the slack adjuster to ensure grease purges at the slack end. Figure 4.6.

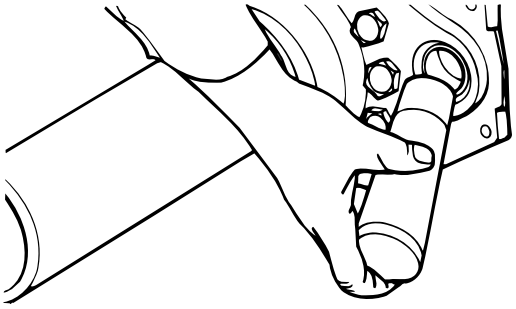

4000346a

Figure 4.5

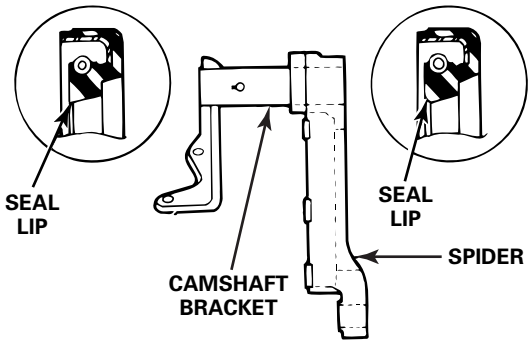

4000347a

Figure 4.6

3. If the camshaft bracket has been removed, install the chamber bracket seal and bracket onto the spider. Tighten the capscrews to the correct torque. Figure 4.4.

Hazard Alert Messages

Read and observe all Warning and Caution hazard alert messages in this publication. They provide information that can help prevent serious personal injury, damage to components, or both.

⚠ WARNING

To prevent serious eye injury, always wear safe eye protection when you perform vehicle maintenance or service.

Use the correct shoe return spring with the Q Plus™ camshaft. An incorrect shoe spring can interfere with the camshaft and affect braking performance. Serious personal injury and damage to components can result.

⚠ ASBESTOS AND NON-ASBESTOS FIBERS WARNING

Some brake linings contain asbestos fibers, a cancer and lung disease hazard. Some brake linings contain non-asbestos fibers, whose long-term effects to health are unknown. You must use caution when you handle both asbestos and non-asbestos materials.

⚠ CAUTION

Only install a Q Plus™ camshaft in a Q Plus™ brake. A Q Series hammerclaw camshaft will not provide enough clearance between the brake shoe and the brake drum. Brake drag and damage to components can result.

To install a new brake drum so that it fits correctly over a Q Plus™ brake shoe, you must install a Q Plus™ camshaft to prevent damage to components.

Assembly

Automatic Slack Adjuster

Since January 1993, some parts of Meritor automatic slack adjusters are not serviceable or interchangeable with parts from earlier models. Refer to Section 1 for more information.

Never mix automatic slack adjusters on the same axle. Always use replacement parts that were originally designed for the brake system to help ensure maximum brake performance.

1. Remove any corrosion-preventive material that may have been applied to the parts you will assemble.
2. Use grease to lubricate the gear bore in the housing.
3. Lubricate the worm gear seal with grease that meets Meritor specifications. Press the seal into its groove. Push the gear into the housing.

⚠ CAUTION

Install the seal with the lips outside of the bore and the metal retainer inside of the bore to prevent contaminants from entering the slack adjuster housing. Damage to components can result.

4. Place the seal directly over the worm bore with the seal lips outside of the bore and the metal retainer inside of the bore. Figure 5.1. Use a hammer and 1-3/16-inch (30.2 mm) diameter seal driver to install the seal straight into the bore. Figure 5.2. Do not hit the seal after it reaches the bottom of the bore. Damage to the seal will result.

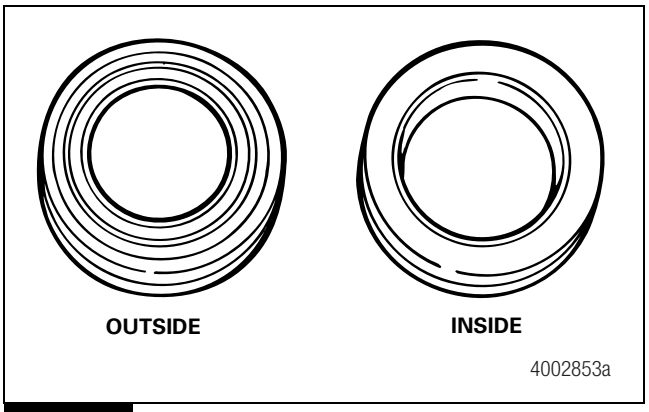

Figure 5.1

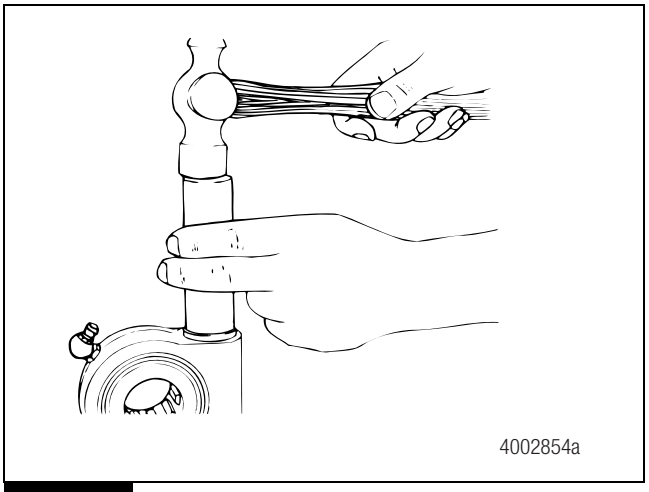

Figure 5.2

5. If you removed the pin, install it into the rod and piston. Figure 5.3.

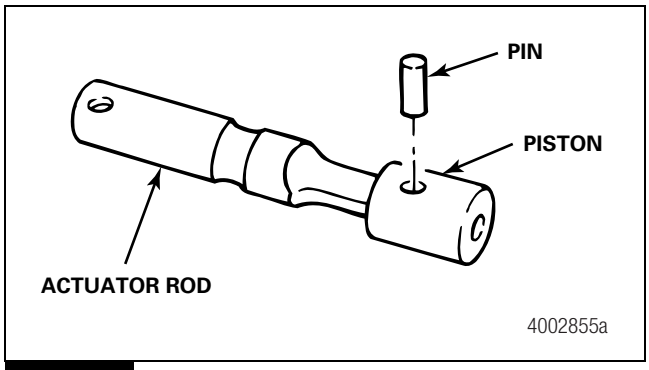

Figure 5.3

6. Apply a small amount of grease to the actuator piston and install the actuator rod and piston assembly into the actuator adjusting sleeve.
7. Slide the piston retaining ring over the rod.
8. Extend the coils of the ring.
9. Use a small screwdriver to press one end of the ring into the groove. Figure 5.4.

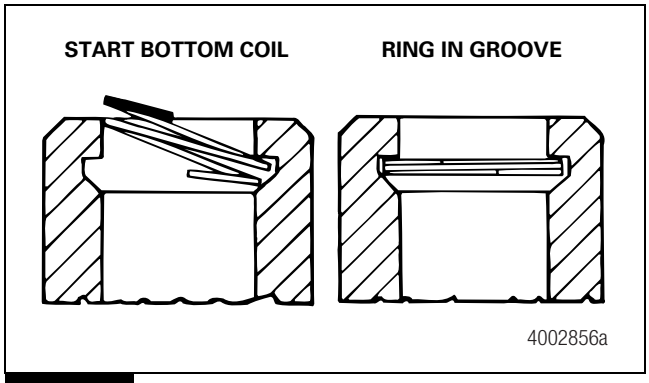

Figure 5.4

10. Keep the coil extended. Press on the ring and work around the groove until the ring is in the groove completely.
11. Check to ensure that the ring is installed correctly in the groove. You cannot pull the piston out of the actuator if the retaining ring is installed correctly.
12. Disengage the pull pawl. Use a screwdriver or equivalent tool to pry the pull pawl at least 1/32-inch (0.8 mm) to disengage the teeth from the actuator.
13. Make certain the pull pawl is disengaged, and install the actuator assembly into the housing so that the actuator slides along the worm splines.
14. Fill the boot with grease and slip it over the actuator rod. Do not seal the boot to the tapered part of the actuator rod. The top of the boot must fit into the groove.
15. Press the boot metal ring into the slack adjuster housing.
16. Remove the screwdriver or equivalent tool from the pull pawl. The pull pawl will re-engage automatically.
17. Use a grease gun to lubricate the slack adjuster through the grease fitting. If necessary, install a camshaft into the slack adjuster gear to minimize the grease flow through the gear holes.
18. Apply lubrication that meets Meritor specifications until new grease purges from around the camshaft splines and from the pawl assembly. Refer to Section 1.

Installation

Camshaft

1. Install the cam head thrust washer onto the camshaft. Apply Meritor specification O-617-A or O-617-B grease to the camshaft bushings and journals, and seal lips.
2. Install the camshaft through the spider and bracket so that the camshaft turns freely by hand. Figure 5.5.

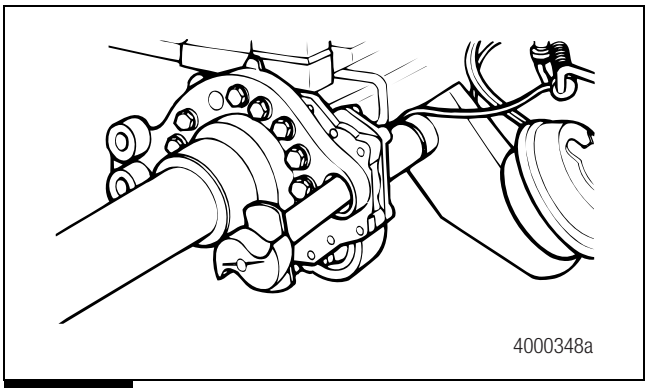

Figure 5.5

Replace a Q Series or P Series Camshaft with a Q Plus™ Camshaft

For all front and drive axle 16.5-Inch Q Series, 16.5-Inch and 18-Inch P Series brakes, when you replace a Q Series or P Series camshaft with a Q Plus™ camshaft, continue to follow maintenance and service procedures for a Q Series or P Series brake and a Q Plus™ camshaft.

The Q Plus™ S-cam replaced the Q Series and P Series S-cam. Because of the larger lift requirements and deeper pockets on the Q Plus™ S-cam, the P Series cast shoe roller does not fully seat in the pocket. Figure 5.6. This cam profile does not affect the performance of the cast shoe brake.

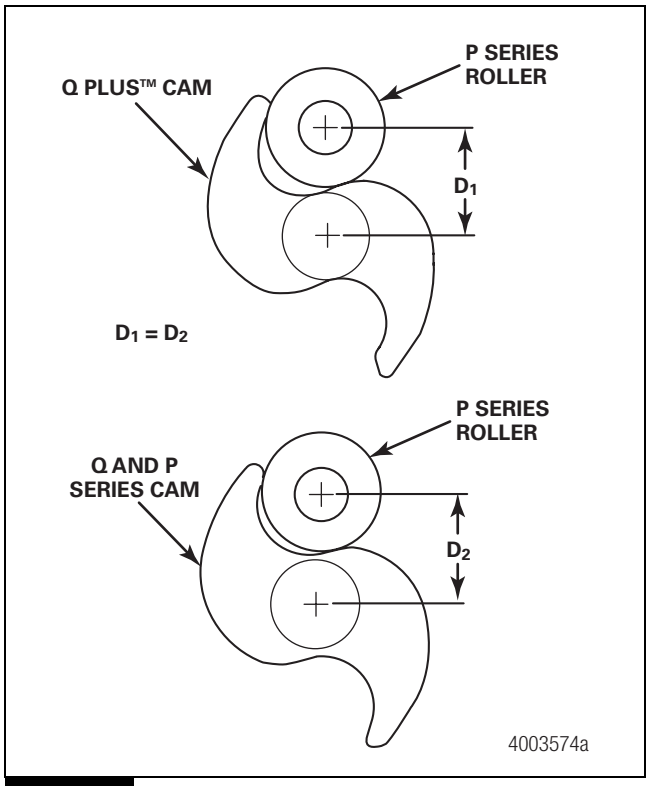

Figure 5.6

Replace a Hammerclaw Camshaft with a Standard Q Plus™ Camshaft

Follow Steps 1-2 under Q Plus™ and Q Series 16.5-Inch Brakes in this section to replace a Q Series hammerclaw camshaft with a standard Q Plus™ camshaft. Continue to follow service and maintenance procedures for a Q Plus™ camshaft and Q Series brake.

For front axles only, a standard Q Plus™ camshaft and a shoe return spring with an offset center bar replaces the hammerclaw Q Series camshaft and shoe return spring with a straight center bar on the 16.5 x 5-inch and 6-inch Q Series cam brake. Figure 5.7 and Figure 5.8.

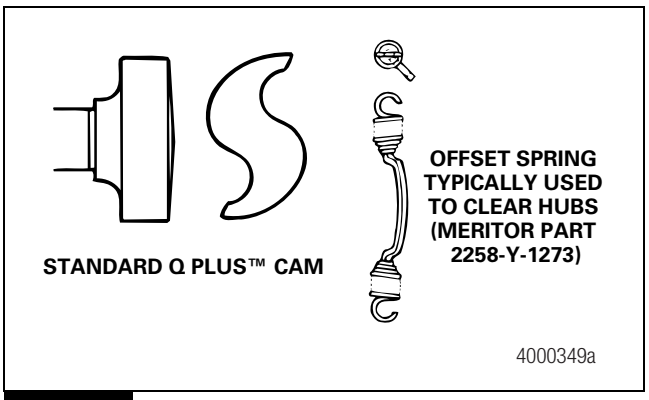

Figure 5.7

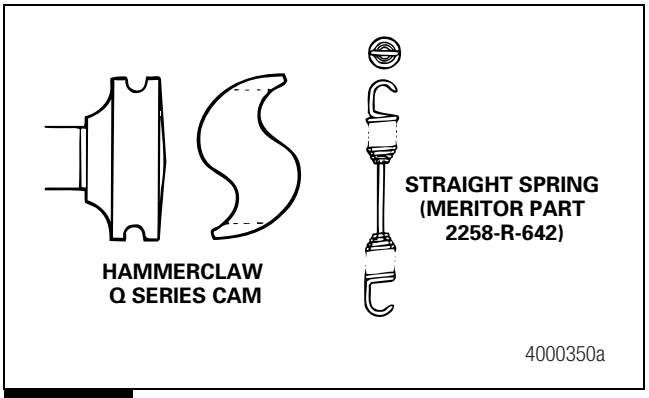

Figure 5.8

A Q Plus™ camshaft has deeper roller pockets than a Q Series camshaft and has “Q Plus” forged into one of the pockets. You may notice a larger gap between the brake lining and the drum after you assemble the brake shoe and shoe return spring with an offset center bar. Figure 5.9. The excess gap will be eliminated when you correctly adjust the brake.

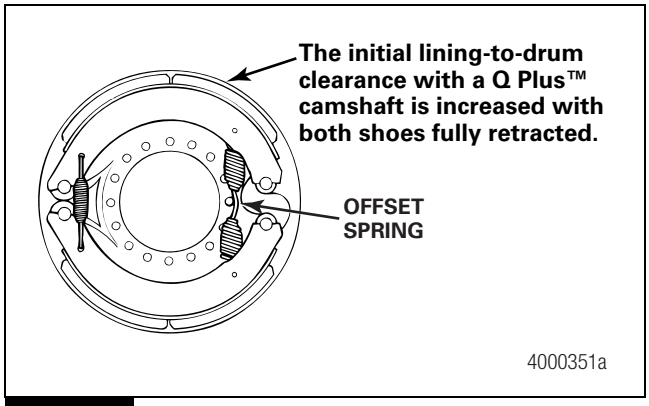

Figure 5.9

Shoe Return Spring

Install the new offset shoe return spring with the open end of the spring hooks toward the camshaft. Figure 5.10.

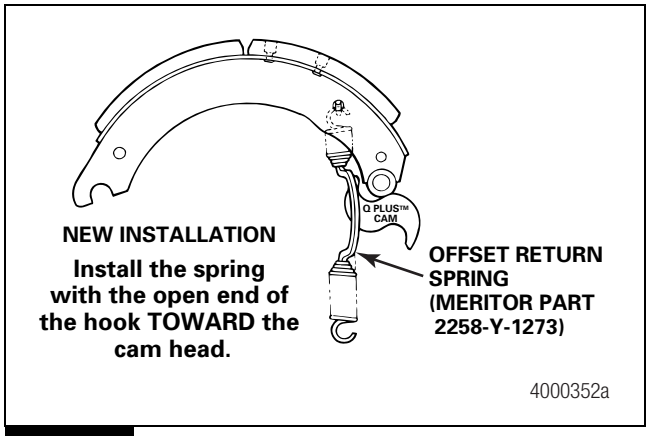

Figure 5.10

Automatic Slack Adjuster onto the Camshaft

NOTE: If the slack adjuster is not a Meritor automatic slack adjuster, refer to the manufacturer's literature for the correct service procedures.

While in service, it is possible that the boot's tie wrap might have been replaced with a tie wrap of a different color than originally installed at manufacture. If this happens, the tie wrap will not correctly identify the brake type and air chamber size.

Meritor recommends that you remove the boot from the slack adjuster to determine the color of the actuator piston, which identifies the brake type and air chamber size.

When You Replace an Automatic Slack Adjuster

The original equipment manufacturer paints the chassis and slack adjusters, which includes the mylar tag or tie wrap, depending on the slack adjuster model.

When you replace an automatic slack adjuster, the color of the actuator piston on the new slack adjuster must match the color of the actuator piston on the in-service slack adjuster you'll replace.

Check the mylar tag or color-coded tie wrap, or remove the boot as described below to identify the color of the actuator piston. To ensure a correct installation, this color must match the color of the actuator piston on the in-service slack adjuster you'll replace.

- **If you are unsure of the color of the actuator piston on the in-service slack adjuster:** Remove the piston boot to see the color of the actuator piston to ensure a correct installation. The color must be the same as the new slack adjuster you'll install.

For a complete color-coding list, refer to Parts Catalog PB-8857, Brake, Trailer Axle and Wheel Attaching Parts. To obtain this publication, refer to the Service Notes page on the front inside cover of this manual.

1. Check the camshaft and bushings and seals for wear and corrosion. Turn the camshaft by hand to check for smooth operation. Repair or replace parts as required.
2. Apply the service brake and spring brake several times. Check that the chamber return spring retracts the push rod quickly and completely. If necessary, replace the return spring or the air chamber.
3. Verify that the new automatic slack adjuster is the same length as the one you are replacing. Refer to Table B.

Table B: Chamber and Automatic Slack Adjuster Sizes

Length of Slack Adjuster (Inches)	Size of Chamber (Square Inches)
5	9, 12, 16, 20, 24, 30*
5-1/2	9, 12, 16, 20, 24, 30, 36*
6	24, 30, 36
6-1/2	30, 36

*Use an auxiliary spring on slack adjusters used with size 9 and 12 chambers. A size 9 or 12 chamber return spring cannot supply enough spring tension to completely retract the slack adjuster.

⚠ WARNING

Before you service a spring chamber, carefully follow the manufacturer's instructions to compress and lock the spring to completely release the brake. Verify that no air pressure remains in the service chamber before you proceed. Sudden release of compressed air can cause serious personal injury and damage to components.

4. If the vehicle has spring brakes, follow the chamber manufacturer's instructions to compress and lock the springs to completely release the brakes. Verify that no air pressure remains in the service chambers.

⚠ CAUTION

Most Meritor automatic slack adjusters manufactured after January 1990 have lubrication holes in the gear splines. Do not operate the actuator rod before you install the slack adjuster. Lubricant can pump through the holes and onto the splines. Damage to components can result.

5. If the automatic slack adjuster gear has a 10-tooth spline, apply Meritor specification O-637, part number 2297-U-4571, anti-seize compound, or equivalent. This anti-seize compound is a corrosion-control grease. Do not mix this grease with other greases.

NOTE: Install the slack adjuster so that you can remove a conventional pawl or disengage a pull pawl when you adjust the brake.

6. Add the thick camshaft thrust washer. Install the slack adjuster onto the camshaft. Position the slack adjuster so that you can access the pawl when you adjust the brake.
7. Add thin camshaft spacing washers, followed by a thick camshaft spacing washer (thick spacing washer must be next to the snap ring). Install the snap ring.
8. Verify that camshaft axial end play on trucks and tractors is 0.005-0.060-inch (0.127-1.52 mm). On trailers, no end play adjustment is required. End play is controlled by the snap ring near the cam head end of the camshaft.
   - **If axial end play is not 0.005-0.060-inch (0.127-1.52 mm):** Remove the snap ring. Add or remove the appropriate number of spacing washers to achieve the correct specification.
9. If the assembly has a "bolt-on" type camshaft, refer to Assembly of the Slack Adjuster for a Bolted Camshaft in this section.
10. Install the clevis onto the push rod.

⚠ CAUTION

You must disengage a pull pawl or remove a conventional pawl before rotating the manual adjusting nut, or you will damage the pawl teeth. A damaged pawl will not allow the slack adjuster to automatically adjust brake clearance. Replace damaged pawls before putting the vehicle in service.

11. Disengage the pull pawl. Turn the manual adjusting nut to align the holes in the slack adjuster arm and clevis. Figure 5.11.

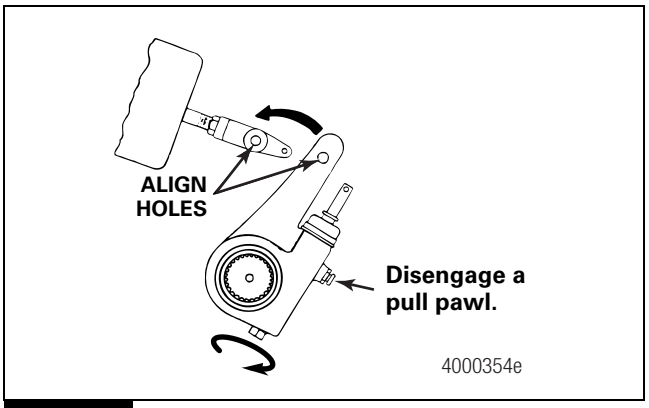

Figure 5.11

Assembly of the Slack Adjuster for a Bolted Camshaft

Refer to Figure 5.12 for measurement location and component description.

Place bracket washer (1229H4090) between slack and bracket. Place the slack on the camshaft and check in this order.

1. Alignment of slack arm to chamber centerline, maximum 0.100″ mismatch.
2. Slack body to wing bracket clearance during slack actuation.
   - **If slack interferes with bracket:** Shim between slack and bracket washer with the following washers and repeat Step 1.

Part Number	Nominal Thickness
1229-H-4090	0.104″
1229-W-2935	0.030″
1229-X-2936	0.054″

3. Use hardened camshaft step washer and spacer washers to set up end play and slack between 0.005″ and 0.060″. Add spacer washers between the slack body and the hardened camshaft step washer.

Hardened Camshaft Step Washer Part Number	Nominal Step Thickness
1229-L-5030	0.260″
1229-M-5031	0.405″

Spacer Washer Part Number	Nominal Thickness
1229-W-1505	0.090″
1229-D-5022	0.054″

Table C: Typical End Play Washer Requirements

Measured Distance from End of Camshaft to Edge of Slack	Hardened Camshaft Step Washer Thickness	Spacer Washer Thickness
0.200″ to 0.255″	0.260″	None
0.256″ to 0.309″	0.260″	0.504″
0.310″ to 0.345″	0.260″	0.090″
0.346″ to 0.400″	0.405″	None
0.401″ to 0.454″	0.405″	0.054″
0.455″ to 0.490″	0.405″	0.090″
0.491″ to 0.539″	0.405″	0.054″ and 0.090″

4. Install lock washer (WA-18) and bolt (S-2812–2, 0.50″-13 thread x 1.50″ long), then torque bolt to 85-115 lb-ft (115-155 N•m).
5. Verify end play between 0.005″ and 0.060″.
6. Brake assembly check: Actuate brake by pulling on slack to assure cam and roller move freely and that shoes retract when slack is released. Figure 5.12.

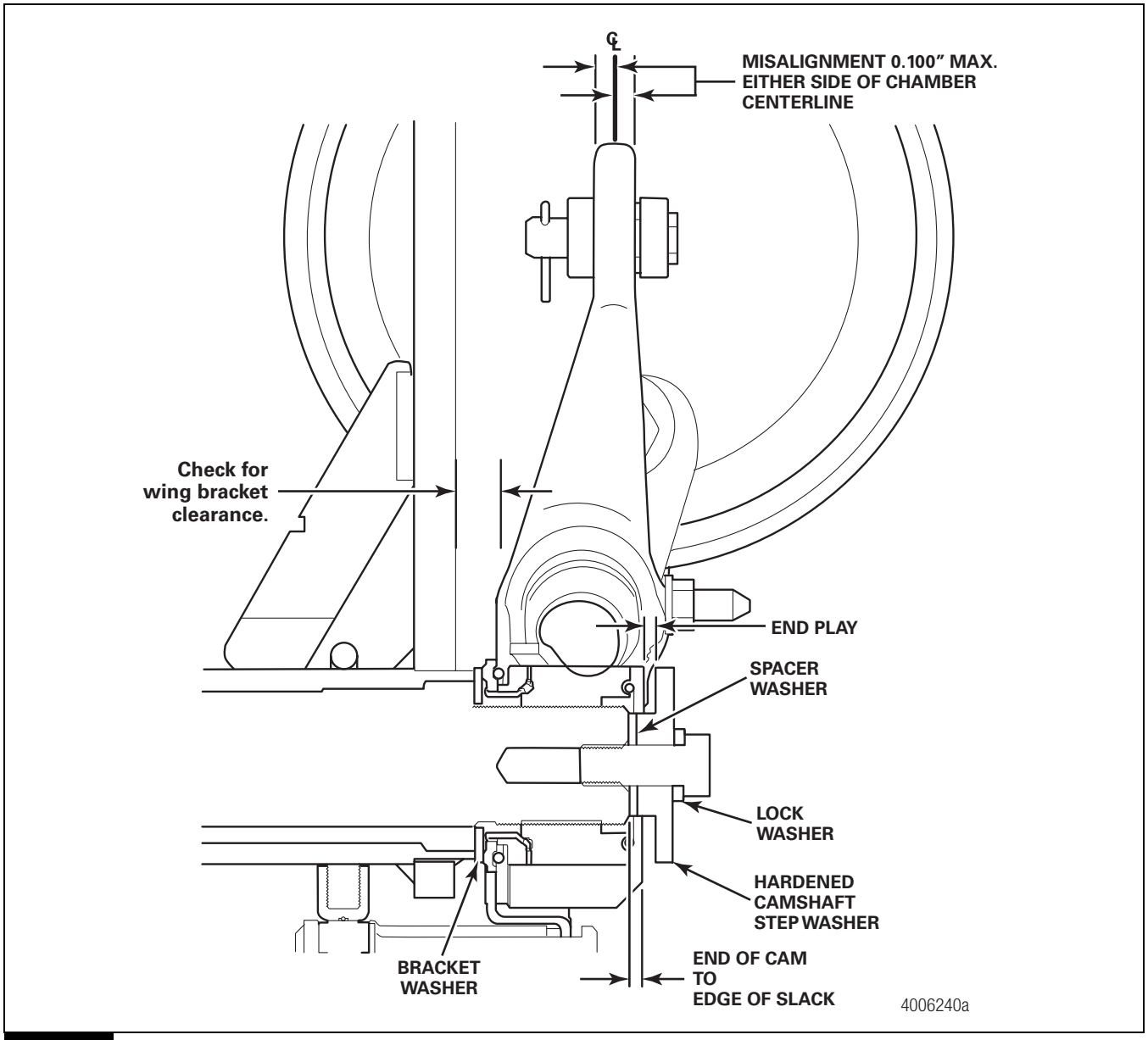

Figure 5.12

Welded Clevis

1. Check the clevis position using the brake slack adjuster position (BSAP) method. Refer to Table E. Apply Meritor specification O-637, part number 2297-U-4571, anti-seize compound or equivalent to the large and small clevis pins. This anti-seize compound is a corrosion-control grease. Do not mix this grease with other greases.

⚠ CAUTION

Always replace used clevis pin retainer clips with new ones when you service an automatic slack adjuster or chamber. Do not reuse retainer clips. Discard used clips. When you remove a retainer clip, it can bend or "gap apart" and lose retention. Damage to components can result.

2. Install new clevis pin retainer clips or cotter pins to secure the clevis pins. Retainer clips must be fully installed and positioned around the side of the clevis pin. Figure 5.13.

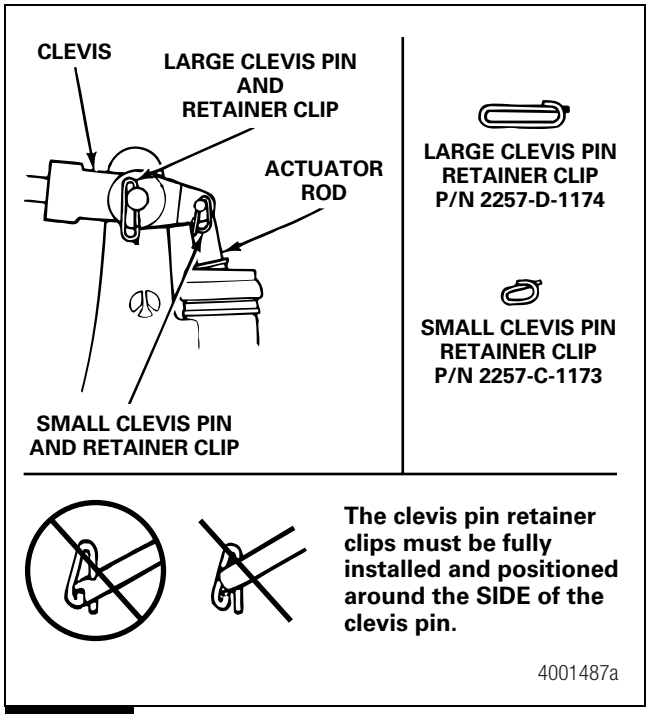

Figure 5.13

Threaded Clevis

The threaded-type clevis is available in two different pin spacings, 1.30-inches (33 mm) and 1.38-inches (35 mm). Figure 5.14.

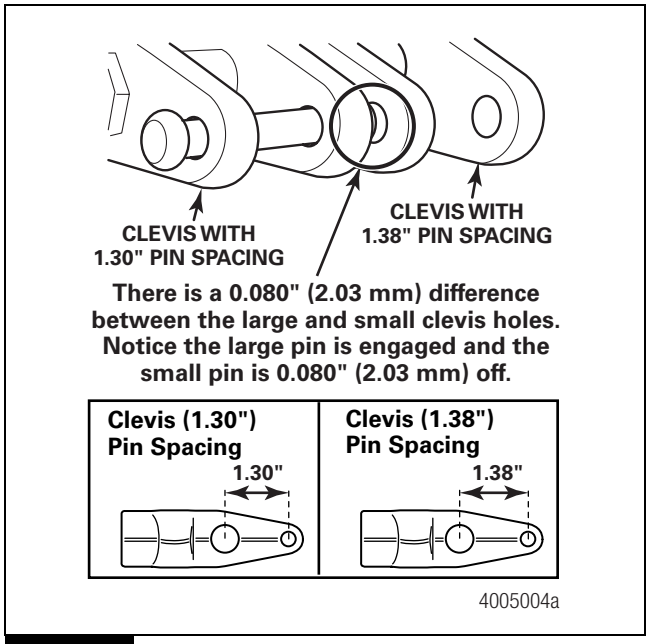

Figure 5.14

Based on your pin spacing, install the threaded clevis to the correct position using the template or brake slack adjuster position (BSAP) method. Refer to Table E.

Verify That the Slack Adjuster Angle is Correct

There are two methods for determining the correct geometry for the slack adjuster.

A. Brake Slack Adjuster Position (BSAP)

B. Template

Trucks and Tractors Equipped with Long-Stroke Chambers

Because of concerns regarding slack adjuster-to-axle clearances at the end of longer strokes, Meritor has revised instructions to use the BSAP method *only*. Trailers are not affected by this change. Refer to Brake Slack Adjuster Position (BSAP) Method and Table E in this section.

Trucks and Tractors Equipped with Standard-Stroke Chambers; Trailers Equipped with Standard- or Long-Stroke Chambers

You can use either the Brake Slack Adjuster Position (BSAP) method or the template method to verify that slack adjuster angles are correct on trucks and tractors with standard-stroke brake chambers and trailers with standard- and long-stroke brake chambers. Refer to Table E.

To obtain the correct slack adjuster template, refer to the Service Notes page on the front inside cover of this manual.

Template Method

⚠ CAUTION

There are three different installation templates for Meritor automatic slack adjusters. The templates are not interchangeable. You must use the correct template and clevis pin spacing and you must adjust the clevis position as described below. If you use the wrong combination and install the clevis in the wrong position, the slack adjuster will not adjust the brake correctly. If the slack adjuster underadjusts, then stopping distances are increased. If the slack adjuster overadjusts, then the linings may drag and damage the brake.

1. Use the correct Meritor automatic slack adjuster template to measure the length of the slack adjuster. The marks by the holes in the small end of the template indicate the length of the slack adjuster. Refer to Table E.
2. Install the large clevis pin through the large holes in the template and the clevis.
3. Select the hole in the template that matches the length of the slack adjuster. Hold that hole on the center of the camshaft.
4. Look through the slot in the template to see if the small clevis hole completely aligns within the slot.
   - **If the small clevis hole doesn't align within the slot:** Adjust the clevis until you can see the small clevis pin hole within the slot. Figure 5.15.

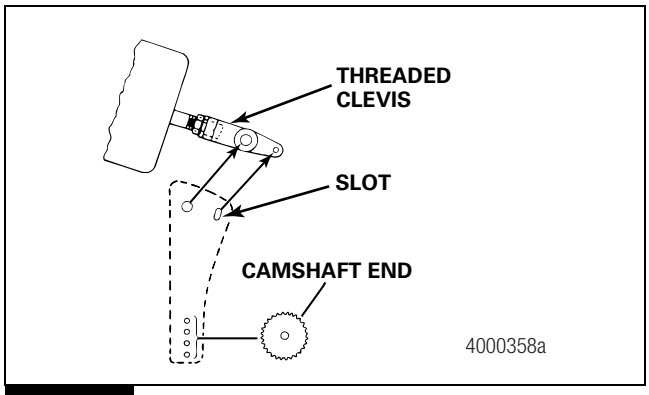

Figure 5.15

5. Verify that the thread engagement between the clevis and push rod is 0.5-0.625-inch (12.7-15.9 mm). Figure 5.16.

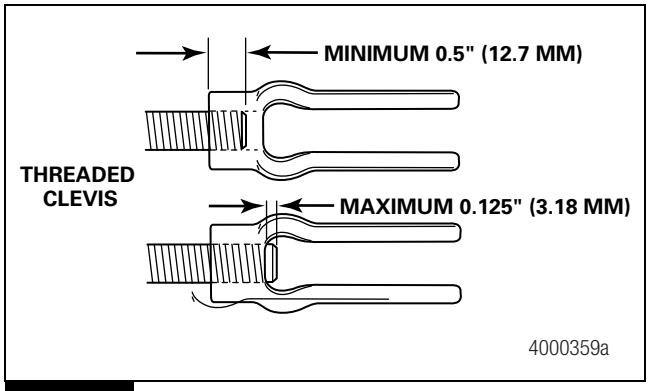

Figure 5.16

6. Verify that the push rod does not extend through the clevis more than 0.125-inch (12.7 mm).
   - **If the push rod extends through the clevis more than 0.125-inch (12.7 mm):** Cut the push rod or install a new air chamber and push rod.
7. Tighten the jam nut against the clevis to the torque specification in Table D.

Table D: Jam Nut Torque Specifications

Threads	Torque
1/2-20	20-30 lb-ft (27-41 N•m)
5/8-18	35-50 lb-ft (48-68 N•m)

8. Use the following steps to install the automatic slack adjuster.
   A. Determine the clevis pin spacing.
   B. Determine the brake offset.
   C. Refer to Table E for the recommended installation.

Table E: Meritor Automatic Slack Adjuster Installation Instructions

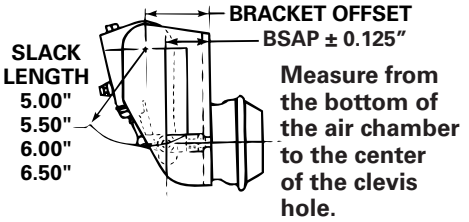

VIEW A 4005445a

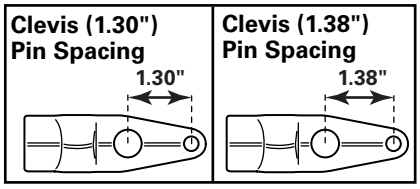

VIEW B 4005444a

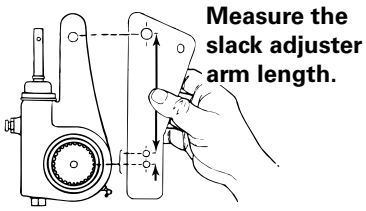

VIEW C 4005446a

1.30″ Clevis Pin Spacing

Slack Length	Bracket Offset Refer to View A.	Clevis Pin Spacing Refer to View B.	±0.125″ BSAP Installation	Clevis Type	Chamber Type	Optional Template Method Refer to View C. Template Color	Template Part Number	Vehicle Application
5.00″ 5.50″ 6.00″ 6.50″	3.75″ and 3.81″	1.30″	2.25″	Threaded or Welded	Standard Stroke or Long Stroke	Not Available		Truck or Tractor Drum Brake

1.38″ Clevis Pin Spacing								
Slack Length	Bracket Offset Refer to View A.	Clevis Pin Spacing Refer to View B.	±0.125″ BSAP Installation	Clevis Type	Chamber Type	Optional Template Method Refer to View C. Template Color	Template Part Number	Vehicle Application
5.00″ 5.50″ 6.00″	3.75″ and 3.81″	1.38″	2.75″	Threaded	Standard Stroke	Dark Brown	TP-4786	Truck or Tractor Drum Brake/ Straight or Offset Clevis
						White	TP-4781	Coach Drum Brake
6.50″			2.62″			Dark Brown	TP-4786	Truck or Tractor Drum Brake/ Straight or Offset Clevis
						White	TP-4781	Coach Drum Brake
1.38″ Clevis Pin Spacing Must Be Used with Other Bracket Offsets								
Slack Length	Bracket Offset	Clevis Pin Spacing	±0.125″ BSAP Installation	Clevis Type	Chamber Type	Optional Template Method Refer to View C. Template Color	Template Part Number	Vehicle Application
5.00″ 5.50″ 6.00″ 6.50″	Other	1.38″	Not Applicable. Use Template Method.	Threaded	Standard Stroke or Long Stroke	Dark Brown	TP-4786	Truck or Tractor Drum Brake/ Straight or Offset Clevis
						Tan	TP-4787	Trailer Drum Brake
						White	TP-4781	Coach Drum Brake

If your combination is not shown, please call ArvinMeritor's Customer Service Center at 800-535-5560.

Brake Slack Adjuster Position (BSAP) Method

Use this method to ensure the correct position of welded or threaded clevises on standard- or long-stroke brake chambers.

When you install the slack adjuster, verify that the BSAP chamber dimension matches the dimension shown in Table E.

Brake Shoes

When the brake is disassembled, or when necessary, lubricate the anchor pins and rollers where these parts touch the brake shoes. Do not allow grease to contact the area of the camshaft roller that touches the camshaft head. Meritor recommends that you replace the springs, rollers, anchor pins and cam bushings at each reline.

Q Plus™ 15- and 16.5-Inch Brakes and Q Series 16.5-Inch Brakes

1. Use Meritor specification O-617-A or O-617-B grease to lubricate the brake shoe roller pin and anchor pin. Figure 5.17.

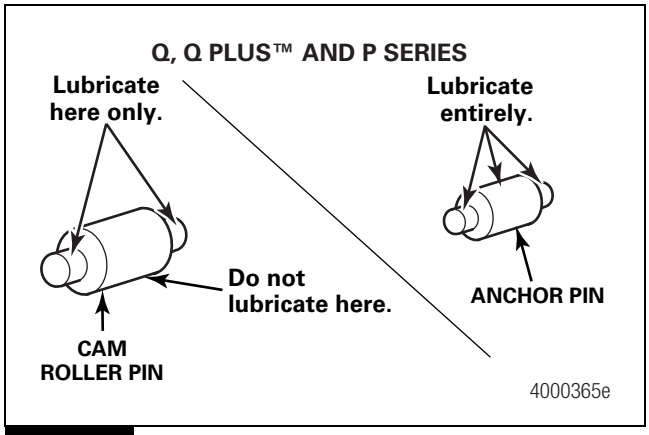

Figure 5.17

2. Place the upper brake shoe into position on the top anchor pin. Hold the lower brake shoe on the bottom anchor pin. Install two new brake shoe retaining springs. Figure 5.18.

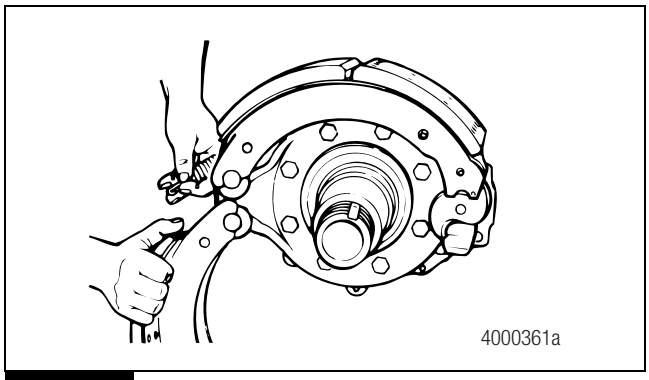

Figure 5.18

3. Rotate the lower brake shoe forward. Install a new brake shoe return spring with the open end of the spring hooks toward the camshaft. Figure 5.19.

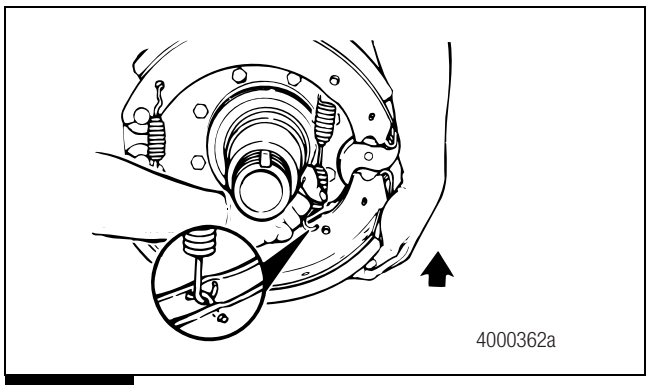

Figure 5.19

4. Pull each brake shoe away from the camshaft to enable you to install the brake shoe roller and roller retainer. Press the retainer ears to fit into the retainer between the brake shoe webs. Figure 5.20.

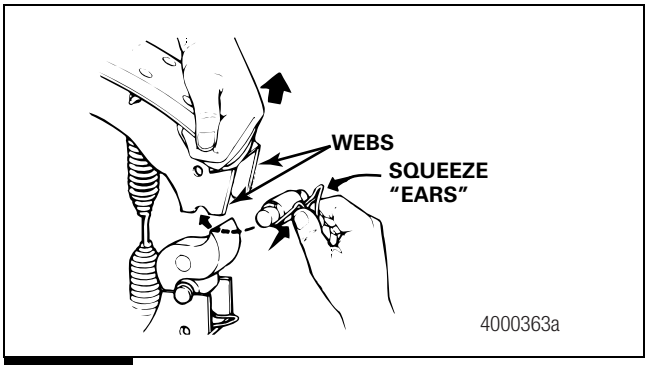

Figure 5.20

5. Push the brake shoe roller retainer into the brake shoe until the ears lock into the shoe web holes. Figure 5.21.

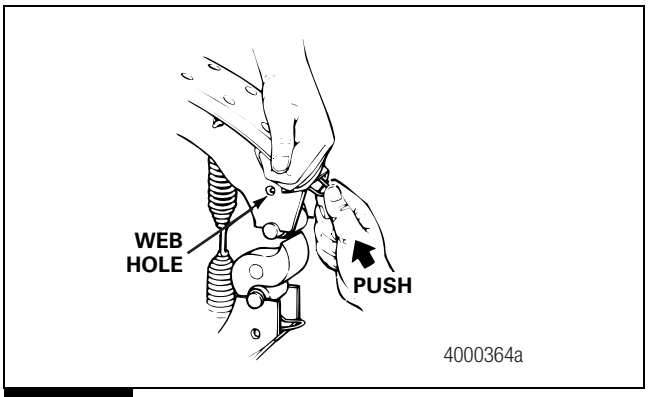

Figure 5.21

Brake Shoes Equipped with a Lining Wear Sensor

Before disassembly, note the routing of the sensor wiring. The wiring harness passes through a dust shield grommet that must be removed in order to pull the harness connector through the dust shield. The replacement assembly contains a new dust shield grommet. Ensure that you route and secure the sensor wiring in the same manner. Reinstall the connector end of the sensor wiring to the main harness.

The brake shoe assembly includes a lining wear sensor. The sensor is located in the primary shoe lining block closest to the camshaft on the inboard side. The first shoe past the camshaft in the direction of wheel rotation is the primary shoe.

The primary shoe can either be on the top or the bottom position, depending on the location of the cam. If the cam is behind the axle, the top shoe is the primary shoe. If the cam is in front of the axle, the bottom shoe is the primary shoe. Figure 5.22.

The preferred sensor position is the primary shoe, cam end block, inboard center rivet. Figure 5.23.

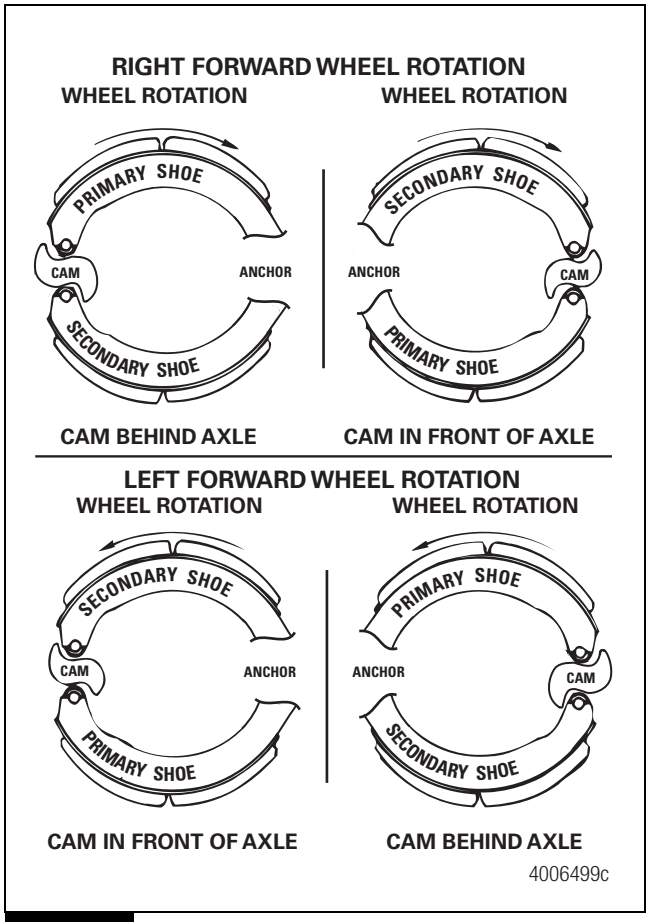

Figure 5.22

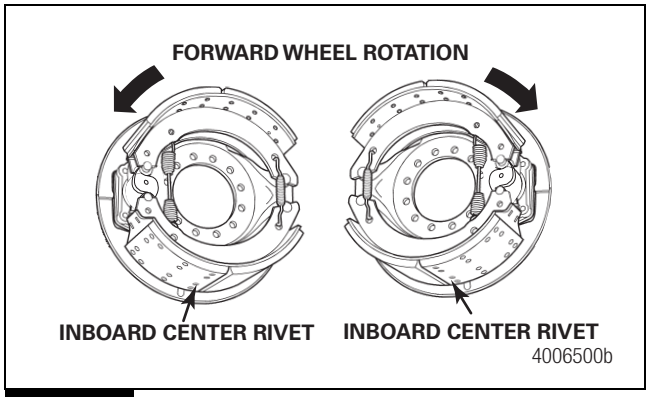

Figure 5.23

Q Series 15-Inch Cam Brake

1. Use Meritor specification O-617-A or O-617-B grease to lubricate the roller pin and anchor pin. Figure 5.24.

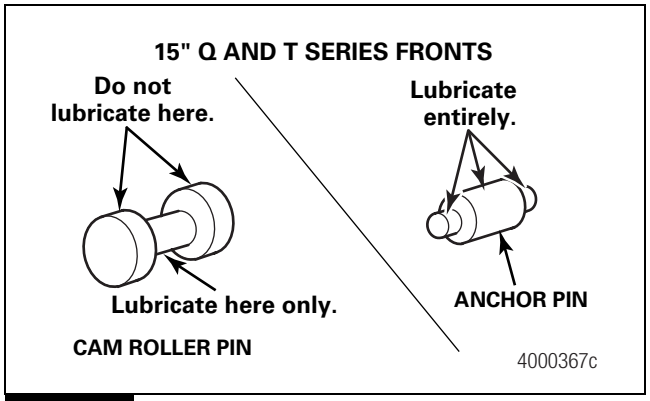

Figure 5.24

2. Install the anchor pins, washers and nuts to the spider if you removed these parts previously. Tighten the anchor pin nuts to 325-375 lb-ft (441-509 N•m).
3. Install a new brake shoe return spring with the open end of the spring hooks toward the camshaft. Install the brake shoes onto the anchor pins. Figure 5.25.

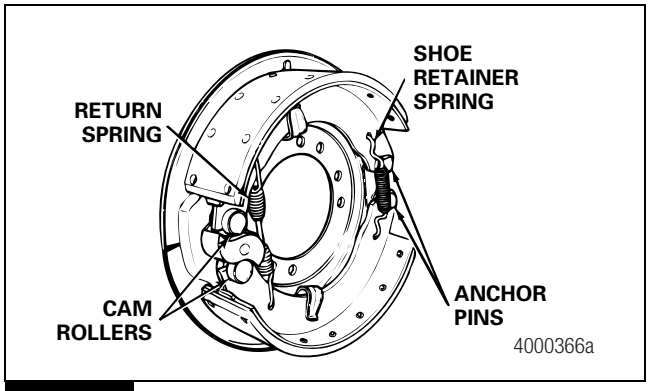

Figure 5.25

4. Hold the bottom brake shoe in position. Install the shoe return spring. Pull the brake shoe away from the camshaft to enable you to install the roller and roller retainer.

P Series and Cast Plus™ Cam Brakes

P Series brakes are available with brake lining wear sensors. Refer to “Brake Shoes Equipped with a Lining Wear Sensor” in this section.

1. Lubricate the camshaft roller pin and anchor pin with Meritor specification O-617-A or O-617-B grease. Figure 5.17.
2. Install the anchor pin bushings. If necessary, align the holes in the bushings with the holes in the spider.
3. Install a new cam roller and cam roller retainers.
4. Install the lower brake shoe in position on the spider.
5. Use a hammer and brass drift to install the anchor pin. If necessary, align the groove on the anchor pin with the holes in the spider and bushing.
6. Install the anchor pin washers, felts, seals, retainers and snap rings, if required. Install lock pins or lock screws, if required. Tighten the screws to 10-15 lb-ft (13.6-20.3 N•m).
7. Install a new shoe return spring onto the brake shoe. Figure 5.26. Place the upper brake shoe into position over the spider. Repeat Steps 4-5.

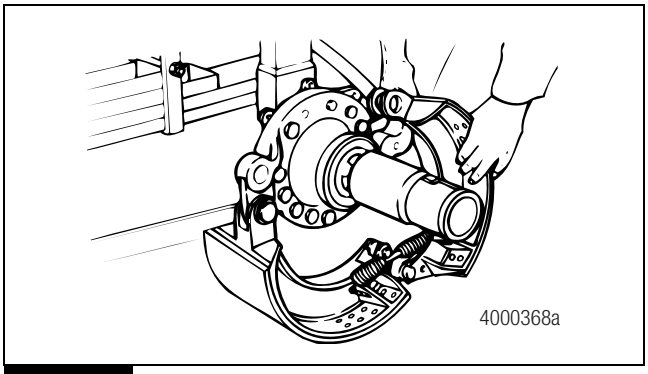

Figure 5.26

T Series Cam Brake

1. Lubricate the roller pin and anchor pin with Meritor specification O-617-A or O-617-B grease. Figure 5.24.
2. Install the anchor pins, washers and nuts onto the backing plate if you removed these parts previously. Tighten the anchor pin nuts to 185-350 lb-ft (251-475 N•m).
3. Install the anti-rattle rod. Install the brake shoe onto the anchor pins and anti-rattle rod.
4. Install the anchor pin snap rings, anti-rattle spring and anti-rattle retainer spring onto the anti-rattle rod.
5. Pull the brake shoe away from the camshaft to enable you to install the brake shoe roller. Install a new brake shoe return spring onto the brake shoe.

Drum and Wheel

Follow the manufacturer’s instructions to install the drum and wheel onto the axle.

Hazard Alert Messages

Read and observe all Warning and Caution hazard alert messages in this publication. They provide information that can help prevent serious personal injury, damage to components, or both.

⚠ WARNING

To prevent serious eye injury, always wear safe eye protection when you perform vehicle maintenance or service.

⚠ ASBESTOS AND NON-ASBESTOS FIBERS WARNING

Some brake linings contain asbestos fibers, a cancer and lung disease hazard. Some brake linings contain non-asbestos fibers, whose long-term effects to health are unknown. You must use caution when you handle both asbestos and non-asbestos materials.

Important Information

Meritor automatic slack adjusters (ASAs) should not need to be manually adjusted in service. ASAs should not have to be adjusted to correct excessive push rod stroke. The excessive stroke may be an indication that a problem exists with the foundation brake, ASA, brake actuator or other system components.

Meritor recommends troubleshooting the problem, replacing suspect components and then confirming proper brake operation prior to returning the vehicle into service.

In the event that a manual adjustment must be made (although not a common practice), a service appointment and full foundation brake, ASA, and other system component inspection should be conducted as soon as possible to ensure integrity of the overall brake system.

For Meritor brake adjustment, refer to the brake adjustment tables in this manual. For non-Meritor brake adjusters, refer to the brake manufacturer's service procedures.

Adjust the Brakes

Measure Free Stroke

When you perform preventive maintenance procedures on an in-service brake, check both the free stroke and adjusted chamber stroke. Refer to the procedures in this section.

Free stroke sets the clearance between the linings and drum. The in-service free stroke may be slightly longer than 0.5-0.625-inch (12.7-15.9 mm) specified in this procedure. This is acceptable if the adjusted chamber stroke is within the limits shown in Table F and Table G.

⚠ CAUTION

You must disengage a pull pawl before rotating the manual adjusting nut, or you will damage the pawl teeth. A damaged pawl will not allow the slack adjuster to automatically adjust brake clearance. Replace damaged pawls before putting the vehicle in service.

1. Disengage a pull pawl. Use a screwdriver or equivalent tool to pry the pull pawl at least 1/32-inch (0.8 mm) to disengage the teeth.
2. Use a wrench to turn the adjusting nut COUNTERCLOCKWISE until the brake shoes contact the drum. Figure 6.1. Then back off the adjusting nut in the opposite direction 1/2 turn for drum brakes or 3/4 turn for disc brakes.

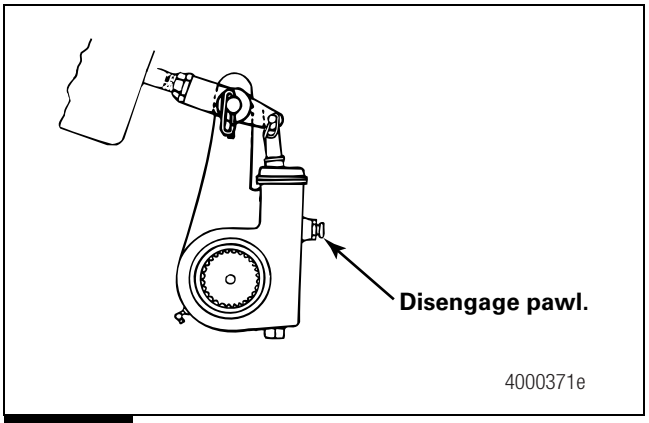

Figure 6.1

3. Measure the distance from the center of the large clevis pin to the bottom of the air chamber while the brake is released. The measurement you obtain is X in Figure 6.2.

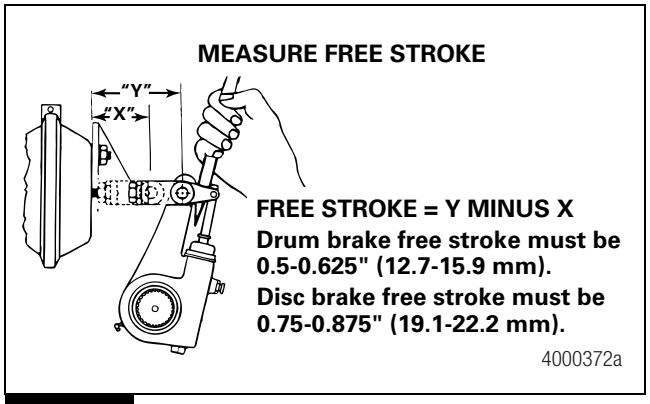

Figure 6.2

4. Use a pry bar to move the slack adjuster and position the linings against the drum, brakes applied. Measure the same distance again while the brakes are applied. The measurement you obtain is Y in Figure 6.2.

⚠ CAUTION

Do not set free stroke shorter than 0.5-0.625-inch (12.7-15.9 mm) for drum brakes. If the measurement is too short, linings can drag. Damage to components can result.

5. Subtract X from Y to obtain the in-service free stroke. The measurement must be 0.5-0.625-inch (12.7-15.9 mm) for drum brakes. Figure 6.2.
   - **If the free stroke measurement is not within specification:** Turn the adjusting nut 1/8 turn in the direction shown in Figure 6.3 and check the free stroke again. Continue to measure and adjust the stroke until the measurement is within specification.

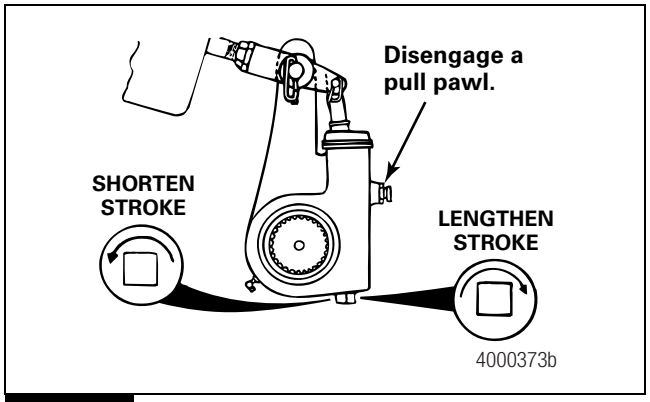

Figure 6.3

6. Re-engage the pull pawl by removing the screwdriver or equivalent tool. The pull pawl will re-engage automatically.
7. If the brakes have spring chambers, carefully release the springs. Test the vehicle before you return it to service.

Important Information

Meritor automatic slack adjusters (ASAs) should not need to be manually adjusted in service. ASAs should not have to be adjusted to correct excessive push rod stroke. The excessive stroke may be an indication that a problem exists with the foundation brake, ASA, brake actuator or other system components.

Meritor recommends troubleshooting the problem, replacing suspect components and then confirming proper brake operation prior to returning the vehicle into service.

In the event that a manual adjustment must be made (although not a common practice), a service appointment and full foundation brake, ASA, and other system component inspection should be conducted as soon as possible to ensure integrity of the overall brake system.

For Meritor brake adjustment, refer to the brake adjustment tables in this manual. For non-Meritor brake adjusters, refer to the brake manufacturer's service procedures.

Commercial Vehicle Safety Alliance (CVSA) Guidelines

Measure Push Rod Travel or Adjusted Chamber Stroke

Use the following procedure to check in-service push rod travel or adjusted chamber stroke on truck and tractor brakes.

⚠ WARNING

Before you service a spring chamber, carefully follow the manufacturer's instructions to compress and lock the spring to completely release the brake. Verify that no air pressure remains in the service chamber before you proceed. Sudden release of compressed air can cause serious personal injury and damage to components.

1. The engine must be OFF. If the brake has a spring chamber, follow the manufacturer's instructions to release the spring. Verify that no air pressure remains in the service section of the chamber.

2. Verify that pressure is 100 psi (689 kPa) in the air tanks. Determine the size and type of brake chambers on the vehicle.
3. With the brakes released, mark the push rod where it exits the chamber. Measure and record the distance. Have another person apply and hold the brakes on full application. Figure 6.4. Hold the ruler parallel to the push rod and measure as carefully as possible. A measurement error can affect CVSA re-adjustment limits. CVSA states that "any brake 1/4-inch or more past the re-adjustment limit, or any two brakes less than 1/4-inch beyond the re-adjustment limit, will be cause for rejection."

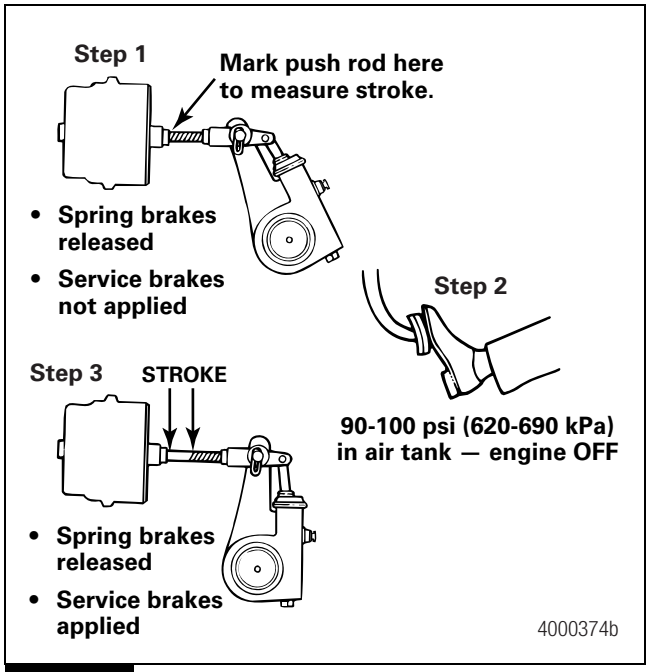

Figure 6.4

4. Measure the push rod travel or adjusted chamber stroke from where the push rod exits the brake chamber to your mark on the push rod. Measure and record the distance. Figure 6.4.
5. Subtract the measurement you recorded in Step 3 from the measurement you recorded in Step 4. The difference is the push rod travel or adjusted chamber stroke.
6. Refer to Table F or Table G to verify that the stroke length is correct for the size and type of air chambers on the vehicle.
   - **If the adjusted chamber stroke is greater than the maximum stroke shown in Table F or Table G:** Diagnose and correct the problem.

Table F: Standard-Stroke Clamp-Type Brake Chamber Data

Type	Outside Diameter (inches)	Brake Adjustment Limit (inches)
6	4-1/2	1-1/4
9	5-1/4	1-3/8
12	5-4/16	1-3/8
16	6-3/8	1-3/4
20	6-25/32	1-3/4
24	7-7/32	1-3/4
30	8-3/32	2
36	9	2-1/4

Table G: Long-Stroke Clamp-Type Brake Chamber Data

Type	Outside Diameter (inches)	Brake Adjustment Limit (inches)
16	6-3/8	2.0
20	6-25/32	2.0
24	7-7/32	2.0
24*	7-7/32	2.5
30	8-3/32	2.5

* For 3" maximum stroke type 24 chambers.

Alternate Method to Measure Push Rod Travel or Adjusted Chamber Stroke

Use the CVSA procedure, except in Steps 3 and 4, measure the distance from the bottom of the air chamber to the center of the large clevis pin on each of the brakes.

CVSA North American Out-of-Service Criteria Reference Tables

Information contained in Table F and Table G is for reference only. Consult the CVSA Out-of-Service Criteria Handbook for North American Standards, Appendix A. Visit their website at http://64.35.82.7/ to obtain the handbook.

Hazard Alert Messages

Read and observe all Warning and Caution hazard alert messages in this publication. They provide information that can help prevent serious personal injury, damage to components, or both.

⚠ WARNING

To prevent serious eye injury, always wear safe eye protection when you perform vehicle maintenance or service.

During lubrication procedures, if grease flows from the seal near the camshaft head, replace the seal. Remove all grease or oil from the camshaft head, rollers and brake linings. Always replace linings contaminated with grease or oil, which can increase stopping distances. Serious personal injury and damage to components can result.

⚠ ASBESTOS AND NON-ASBESTOS FIBERS WARNING

Some brake linings contain asbestos fibers, a cancer and lung disease hazard. Some brake linings contain non-asbestos fibers, whose long-term effects to health are unknown. You must use caution when you handle both asbestos and non-asbestos materials.

Lubrication

Cam Brakes

Refer to Table H for grease specifications.

Table H: Cam Brake Grease Specifications

Components	Meritor Specification	NLGI Grade	Grease Type	Outside Temperature
Retainer Clips	O-617-A	1	Lithium 12-Hydroxy Stearate or Lithium Complex	Refer to the grease manufacturer's specifications for the temperature service limits.
Anchor Pins	O-617-B	2		
Rollers, Journals Only				
Camshaft Bushings	O-645	2	Synthetic Oil, Clay Base	Down to –65° F (–54° C)
	O-692	1 and 2	Lithium Base	Down to –40° F (–40° C)
	O-701	2	Synthetic Oil, Calcium Base	Down to –65° F (–54° C)
	O-703	2	Synthetic Oil, Calcium Base	Down to –65° F (–54° C)
Camshaft Splines	Any of above	Refer to above	Refer to above	Refer to above
	O-637*	1-1/2	Calcium Base	Refer to the grease manufacturer's specifications for the temperature service limits.
	O-641	—	Anti-Seize	
	O-702	1-1/2	Calcium Base	

* Do not mix Meritor specification O-637 grease, part number 2297-U-4571, a calcium-base, rust-preventive grease, with other greases.

Camshaft Bushings

Meritor recommends that you install new camshaft bushings whenever you install a new camshaft.

Lubricate through the fitting on the bracket or spider until new grease flows from the inboard seal.

Long-life trailer cam brake bushings require correct lubrication for maximum performance and bushing life. Although you do not have to replace spider cam bushings on trailer axles as frequently, Meritor recommends that you lubricate the bushings at least four times during the life of your brake lining.

Rollers and Anchor Pins

When you disassemble the brake, or when necessary, lubricate the anchor pins and rollers where these parts touch the brake shoes.

Do not allow grease to contact the area of the roller that touches the camshaft head. To avoid flat spots, lubricate a cam roller directly in the web roller pocket and not at the cam-to-roller contact area. Flat spots can affect brake adjustment and result in premature brake wear or reduced braking performance. Figure 7.1 and Figure 7.2.

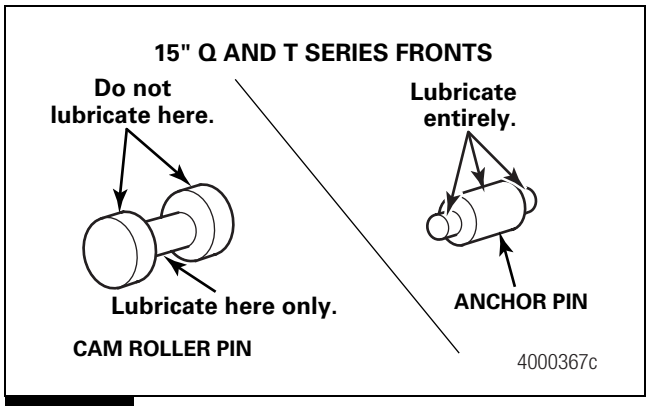

Figure 7.1

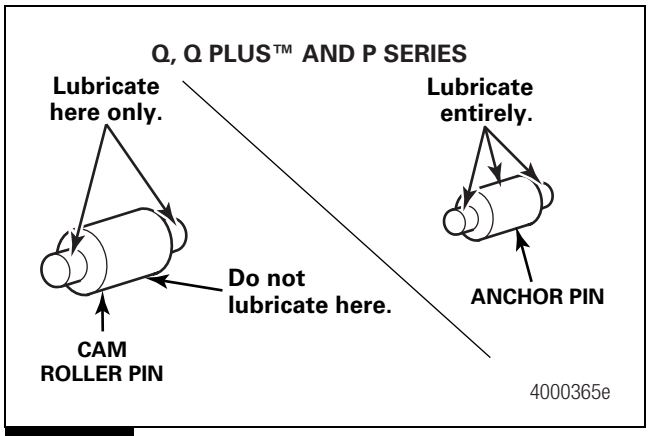

Figure 7.2

Important Information

Meritor automatic slack adjusters (ASAs) should not need to be manually adjusted in service. ASAs should not have to be adjusted to correct excessive push rod stroke. The excessive stroke may be an indication that a problem exists with the foundation brake, ASA, brake actuator or other system components.

Meritor recommends troubleshooting the problem, replacing suspect components and then confirming proper brake operation prior to returning the vehicle into service.

In the event that a manual adjustment must be made (although not a common practice), a service appointment and full foundation brake, ASA, and other system component inspection should be conducted as soon as possible to ensure integrity of the overall brake system.

For Meritor brake adjustment, refer to the brake adjustment tables in this manual. For non-Meritor brake adjusters, refer to the brake manufacturer's service procedures.

Automatic Slack Adjusters

Automatic does not mean maintenance-free. Correctly installed and lubricated automatic slack adjusters help to ensure maximum brake system performance.

Inspect and lubricate the automatic slack adjuster according to one of the schedules below. Use the schedule that requires the most frequent inspection and lubrication, and whenever you reline the brakes. Refer to Table I and Table J for grease specifications.

- Vehicle manufacturer's schedule
- Fleet's schedule
- Every six months
- A minimum of four times during the life of the linings

Adjust the Brakes

Adjust the wheel bearings before you adjust the brakes.

Clean, inspect and adjust the brakes each time you remove a hub. Check for correct lining-to-drum clearance, push rod travel and brake balance.

At Brake Reline

1. Before you perform brake maintenance, check the free stroke and the adjusted chamber stroke.
2. If the free stroke is not correct, refer to Section 8 to correct the stroke before you adjust the chamber stroke.
3. Inspect the boot for cuts or other damage. If the boot is cut or damaged, remove the pawl and inspect the grease.
4. If the grease is in good condition, replace the damaged boot with a new boot.
5. Use a grease gun to lubricate the slack adjuster through the grease fitting. If necessary, install a camshaft into the slack adjuster gear to minimize grease flow through the gear holes.
6. Lubricate until new grease purges from around the inboard camshaft splines and from the pawl assembly.

Slack Adjusters Manufactured Before 1993

Remove and replace the slack adjuster when the following conditions are apparent.

- The grease is dry or contaminated.
- The pawl or actuator is worn.

Grease Specifications

Table I: Automatic Slack Adjuster Grease Specifications

Components	Meritor Specification	NLGI Grade	Grease Type	Outside Temperature
Automatic Slack Adjuster	O-616-A	1	Clay Base	Down to –40° F (–40° C)
	O-645	2	Synthetic Oil, Clay Base	Down to –65° F (–54° C)
	O-692	1 and 2	Lithium Base	Down to –40° F (–40° C)
	O-701	2	Synthetic Oil Calcium Base	Down to –65° F (–54° C)
Clevis Pins	Any of Above	Refer to Above	Refer to Above	Refer to Above
	O-637*	1-1/2	Calcium Base	Refer to the grease manufacturer's specifications for the temperature service limits.
	O-641	—	Anti-Seize	

* Do not mix Meritor specification O-637 grease, part number 2297-U-4571, a calcium-base, rust-preventive grease, with other greases.

Table J: Automatic Slack Adjuster Lubricant Specifications

Operating Temperature	
Down to –40° F (–40° C)	**Down to –65° F (–54° C)**
Clay-Base Greases	Synthetic Greases
Meritor Specification O-616-A, Part Number A-1779-W-283	Meritor Specification O-645, Part Number 2297-X-4574
Shell Darina Number 1	Mobilgrease 28 (Military)
Texaco Thermatex EP-1	Mobiltemp SHC 32 (Industrial)
Texaco Hytherm EP-1	Tribolube-12 Grade 1
Aralub 3837	

Anti-Seize Compound

Use anti-seize compound, Meritor specification O-637 grease, part number 2297-U-4571, on the clevis pins of all automatic slack adjusters.

For a conventional automatic slack adjuster, use anti-seize compound on the slack adjuster and camshaft splines if the slack adjuster gear does not have a grease groove and holes around its inner diameter.

Factory-Installed Automatic Slack Adjusters on Q Plus™ LX500 and MX500 Cam Brake Packages

Q Plus™ LX500 and MX500 cam brake packages include factory-installed automatic slack adjusters that do not have grease fittings. Also, lubrication intervals are different than intervals for conventional slack adjusters.

For complete maintenance and service information on the Meritor LX500 and MX500 cam brakes, refer to Maintenance Manual MM-96173, Q Plus™ LX500 and MX500 Cam Brakes. To obtain this publication, refer to the Service Notes page on the front inside cover of this manual.

Inspection and Maintenance Intervals

Application	Interval
Linehaul and General Service Vehicles	Q Plus™, Cast Plus™ and Q Series brakes at every 100,000 miles (160 000 km); or every six months, whichever comes first. P Series brakes at every 50,000 miles (80 000 km); or every six months, whichever comes first.
General Service and Heavy Service Vehicles	At least every four months, when you replace the seals and reline the brakes. Every two weeks during the first four-month period, inspect for hardened or contaminated grease, and for the absence of grease, to help determine lubrication intervals. Lubricate more often for severe-duty applications.
Restricted Service Vehicles	Lubricate every six months, at each reline, or at every 10,000 miles (16 000 km), whichever comes first.

Reline the Brakes

Reline the brakes when the lining thickness is 0.25-inch (6.3 mm) at the thinnest point. The rivets or bolts must not touch the drum. Damage to components will result. Meritor recommends that you replace the springs, rollers, camshaft bushings and anchor pins at each reline. Reline the brakes when the lining thickness is 0.25-inch (6.3 mm) at the thinnest point. Replace shoe retainer springs, check the drum, and perform a major inspection when you reline the brakes.

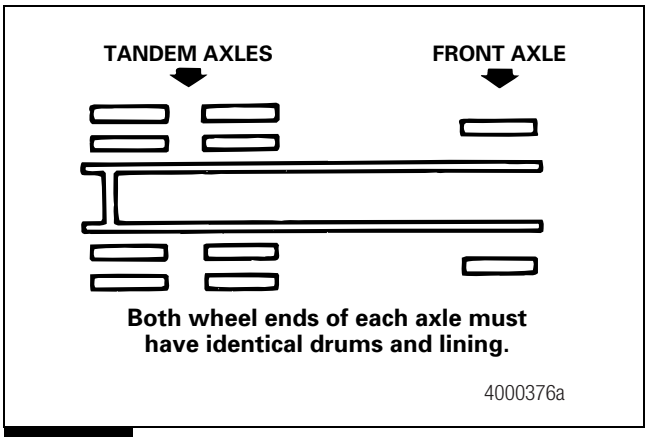

Figure 7.3

Important Information on Linings and Primary Shoe Locations

Use the Correct Lining Material

Use the lining material specified by the vehicle manufacturer. This will help to ensure that the brakes perform correctly and meet Department of Transportation (DOT) performance regulations.

Also note that the drums and linings on a front axle can be different than drums and linings on a rear axle. Figure 7.3.

Single Axles

Always reline both wheels of a single axle at the same time. Always install the same type linings and drums on both wheels of a single axle.

Tandem Axles

Always reline all four wheels of a tandem axle at the same time. Always install the same type linings and drums on all four wheels of a tandem axle.

Combination Friction Linings

When you install combination friction linings, you must install the **primary** lining on the **primary** brake shoe. If you install combination friction linings incorrectly, damage to components will result. Carefully follow instructions included with the replacement linings. You can combine brake linings, which means that the linings you install on the primary shoe will have a different friction rating than the linings you install on the secondary shoe. However, you must install the primary lining on the primary shoe. Carefully follow the instructions included with the replacement combination linings.

Primary Shoe Locations

The first shoe past the camshaft in the direction of wheel rotation is the primary shoe. Figure 7.4. The primary shoe can be either at the top or bottom position, depending on the location of the camshaft. If the camshaft is behind the axle, the top shoe is the primary shoe. If the cam is in front of the axle, the top shoe is the primary shoe.

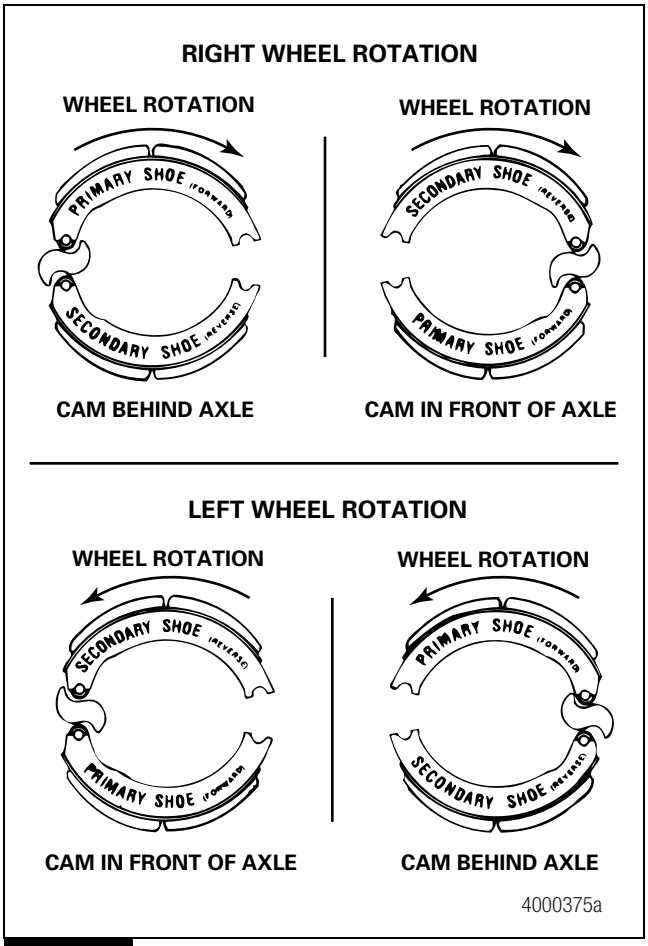

Figure 7.4

Major Overhaul

Perform a major overhaul at every second reline, or as necessary. Replace the shoe return springs. Replace the damaged or worn parts with genuine Meritor parts. Check the components for the following conditions.

- Spiders for distortion and loose bolts
- Anchor pins for wear and correct alignment
- Brake shoes for wear at anchor pin holes or roller slots
- Camshafts and camshaft bushings for wear
- Brake linings for grease on the lining, wear and loose rivets or bolts
- Drums for cracks, deep scratches or other damage

Inspection

Before You Return the Vehicle to Service

⚠ WARNING

To prevent serious eye injury, always wear safe eye protection when you perform vehicle maintenance or service.

1. Check the complete air system for worn hoses and connectors. With the air pressure at 100 psi (689 kPa), the brakes released and the engine off, tractor air pressure loss must not exceed two psi (13.8 kPa) per minute. Total tractor and trailer loss must not exceed three psi (20.7 kPa) per minute.
2. Verify that the air compressor drive belt is tight. Air system pressure must rise to approximately 100 psi (689 kPa) in two minutes.
3. The governor must be checked and set to the specifications supplied by the vehicle manufacturer.
4. Both the tractor and trailer air systems must match the specifications supplied by the vehicle manufacturer.
5. Both wheel ends of each axle must have the same linings and drums. All four wheel ends of tandem axles also must have the same linings and drums. It is not necessary for the front axle brakes to be the same as the rear drive axle brakes. Figure 7.5.

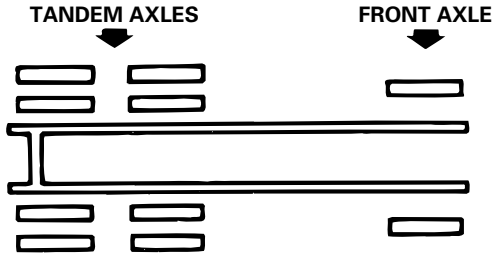

Both wheel ends of each axle must have identical drums and lining.

4000376a

Figure 7.5

6. Always follow the specifications supplied by the vehicle manufacturer for the correct lining to be used. Vehicle brake systems must have the correct friction material and these requirements can change from vehicle to vehicle.
7. The return springs must retract the shoes completely when the brakes are released. Replace the return springs each time the brakes are relined. The spring brakes must retract completely when they are released.
8. The air chamber area multiplied by the length of the automatic slack adjuster is called the AL factor. This number must be equal for both ends of a single axle and all four ends of a tandem axle. Figure 7.6.

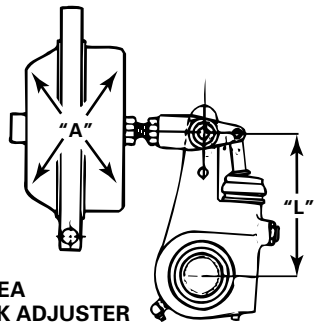

AL FACTOR = A x L
A = AIR CHAMBER AREA
L = LENGTH OF SLACK ADJUSTER

4000377a

Figure 7.6

Important Information

Meritor automatic slack adjusters (ASAs) should not need to be manually adjusted in service. ASAs should not have to be adjusted to correct excessive push rod stroke. The excessive stroke may be an indication that a problem exists with the foundation brake, ASA, brake actuator or other system components.

Meritor recommends troubleshooting the problem, replacing suspect components and then confirming proper brake operation prior to returning the vehicle into service.

In the event that a manual adjustment must be made (although not a common practice), a service appointment and full foundation brake, ASA, and other system component inspection should be conducted as soon as possible to ensure integrity of the overall brake system.

For Meritor brake adjustment, refer to the brake adjustment tables in this manual. For non-Meritor brake adjusters, refer to the brake manufacturer's service procedures.

Troubleshooting

⚠ WARNING

To prevent serious eye injury, always wear safe eye protection when you perform vehicle maintenance and service.

Table K: Cam Brakes, All Models

Symptoms	Possible Causes	Corrective Actions
The adjusted stroke is too long.	The slack adjuster part number is incorrect.	Check with the warehouse distributor or original equipment manufacturer.
No adjustment occurs.	The clevis is installed at the wrong angle (BSAP or template).	Use the correct template or BSAP setting to install the clevis correctly.
	Wear between the clevis and collar is excessive, more than 0.060-inch (1.52 mm), (Quick Connect clevis).	Replace with a threaded clevis.
	The jam nut at the clevis is loose.	Tighten to specification.
	The clevis pin bushing in the slack arm is worn. The inside diameter of the bushing is larger than 0.53-inch (13.46 mm).	Replace the bushing.
	The return spring in the air chamber is weak or broken. Spring force must be at least 32 lb (142.4 N) at the first push rod movement.	Replace the return spring or air chamber.
	The spring brake does not retract fully.	Repair or replace the spring brake.
	The teeth on the pawl or actuator are worn or stripped.	Replace the slack adjuster.

Table K: Cam Brakes, All Models

Symptoms	Possible Causes	Corrective Actions
The adjusted stroke is too long. **No adjustment occurs**	High torque is required to rotate the worm when the slack is removed from the vehicle. • In service slack, maximum worm torque: 45 lb-in (5.09 N•m) • New or rebuilt slack, maximum worm torque: 25 lb-in (2.83 N•m)	Replace the slack adjuster.
	Looseness between the camshaft splines and automatic slack adjuster gear is excessive.	Replace the powershaft, gear or automatic slack adjuster as needed.
	Components, such as the cam bushing, are worn.	Replace the components.
	The non-original equipment manufacturer replacement linings may have excessive swell or growth.	Use Meritor-approved linings.
The adjusted stroke is too short.	The slack adjuster part number is incorrect.	Check with the warehouse distributor or original equipment manufacturer.
The linings drag.	The clevis is installed at the incorrect angle.	Use the correct template to install the clevis correctly.
	The jam nut at the clevis is loose.	Tighten to specification.
	The spring brake does not retract fully.	Repair or replace the spring brake.
	The manual adjustment is incorrect.	Adjust the brake.
	There is poor contact between the linings and the drum, or the drum is out-of-round.	Repair or replace the drums or linings.
	There is a brake temperature imbalance.	Correct the brake balance.
	The non-original equipment manufacturer replacement linings may have excessive swell or growth.	Use Meritor-approved linings.
	Insufficient air system pressure —causing parking spring to apply.	Check the air system pressure.

Torque Specifications

Cam Brakes

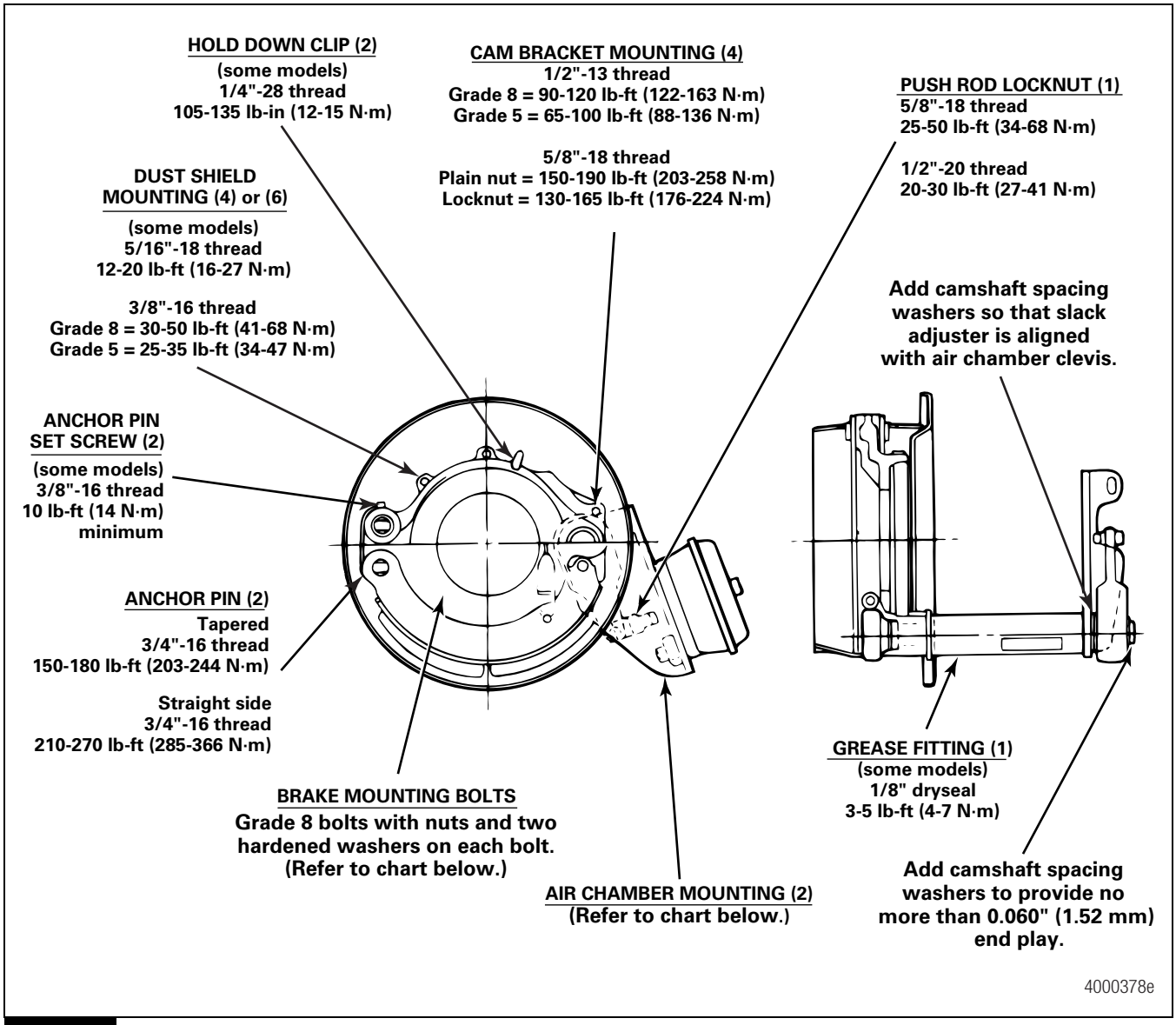

Figure 9.1

Table L: Brake Mounting Bolts

Bolt Size, Grade 8	Torque, lb-ft (N•m)
7/16″-20	60-75 (81-102)
1/2″-20	85-115 (115-156)
9/16″-18	130-165 (176-224)
5/8″-18	180-230 (244-312)

Table M: Air Chamber Mounting, Grade 8 Nuts and Hard Flat Washers

Chamber Size	9	12	16	20	24	30	36	Spring Chamber
Bendix	20-30 lb-ft (27-41 N•m)		30-45 lb-ft (41-61 N•m)			45-65 lb-ft (61-88 N•m)		65-85 lb-ft (88-115 N•m)
Haldex	35-50 lb-ft (48-68 N•m)			70-100 lb-ft (95-136 N•m)				
MGM	35-40 lb-ft (48-54 N•m)			133-155 lb-ft (180-210 N•m)				
Anchorlok/ Haldex	—			130-150 lb-ft (177-203 N•m)				

Meritor Heavy Vehicle Systems, LLC
2135 West Maple Road
Troy, MI 48084 USA
800-535-5560
arvinmeritor.com

Copyright 2006
ArvinMeritor, Inc.

Printed in USA

Revised 07-06
Maintenance Manual 04 (16579/22882)

ArvinMeritor™