Service Data

SD-08-2414

Bendix® AD-IP™ Integral Purge Air Dryer

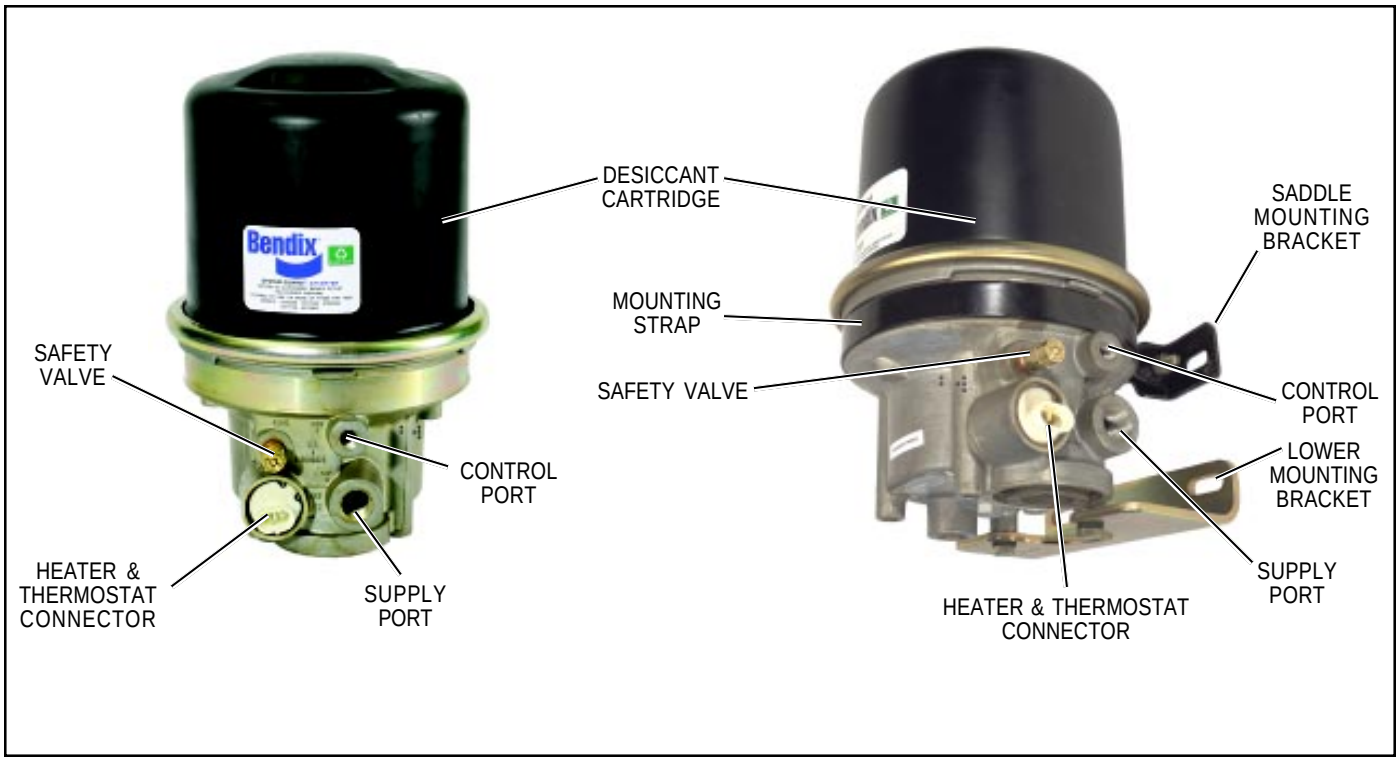

*FIGURE 1 - **AD-IP™ INTEGRAL PURGE AIR DRYER***

DESCRIPTION

The function of the Bendix® AD-IP™ integral purge air dryer is to collect and remove air system contaminants in solid, liquid and vapor form before they enter the brake system. It provides clean, dry air to the components of the brake system which increases the life of the system and reduces maintenance costs. Daily manual draining of the reservoirs is eliminated.

The AD-IP™ air dryer consists of a desiccant cartridge secured to a die cast aluminum end cover with a single, central bolt. The end cover contains a check valve assembly, safety valve, heater and thermostat assembly, three pipe thread air connections and the purge valve assembly. The removable purge valve assembly incorporates the purge valve mechanism and a turbo charger cutoff feature that is designed to prevent loss of engine “turbo” boost pressure during the purge cycle of the AD-IP™ air dryer. For ease of serviceability, all replaceable assemblies can be replaced without removal of the air dryer from its mounting on the vehicle.

The AD-IP™ air dryer has three female pipe thread air connections identified as follows:

Air Connection Port ID	Function/Connection
CON 4	Control Port (purge valve control & turbo cutoff).
SUP 11	Supply Port (air in).
DEL 2	Delivery Port (air out).

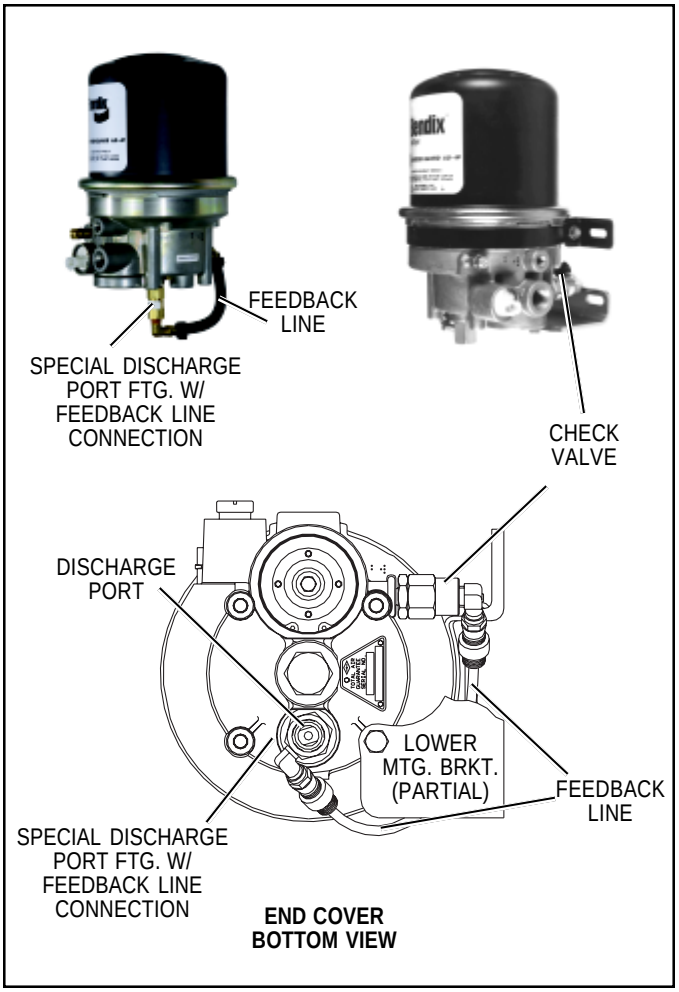

FIGURE 2 - ***AD-IP™ DI DROP IN AIR DRYER FOR HOLSET COMPRESSORS***

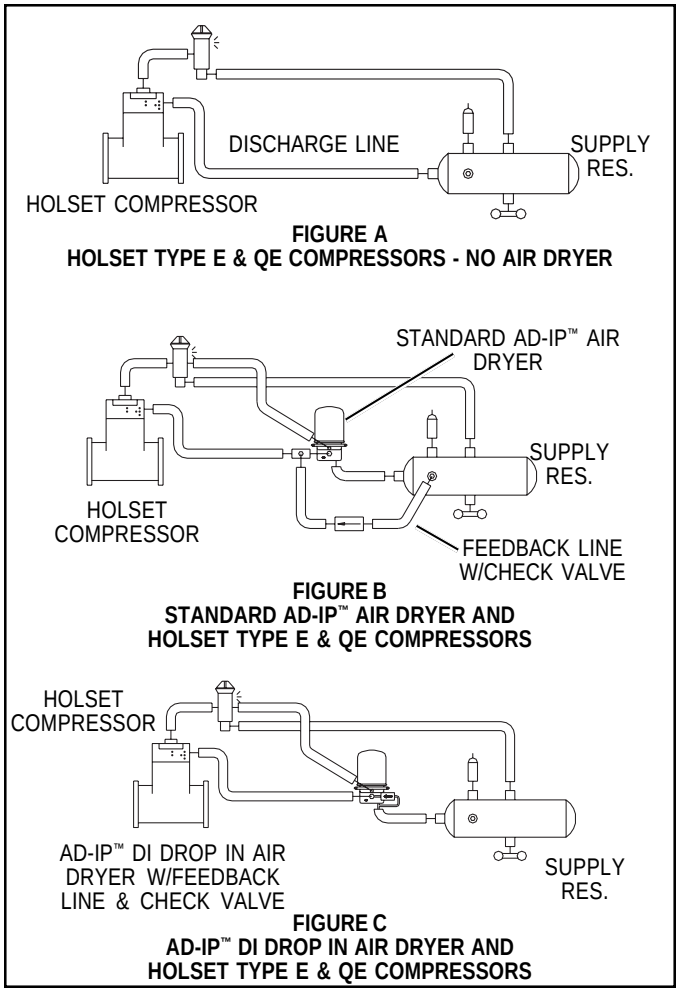

FIGURE 3 - ***AD-IP™ AIR DRYER AND HOLSET TYPE E & QE COMPRESSORS***

AD-IP™ DI "DROP IN" AIR DRYER MODEL

In addition to the standard AD-IP™ air dryer, the Bendix® AD-IP™ DI (Drop In) air dryer is also offered. It is a specialized version designed especially for air systems that use either the Holset (Cummins) Type E or QE air compressor. These Holset compressors utilize an unusual unloading system that requires that air pressure remain in the discharge line during the entire unloaded cycle of the compressor. To accomplish this, Holset compressors rely on air "feedback" from the supply reservoir as shown in Figure 3B. When an air dryer is installed the direct "feedback" from the supply reservoir is interrupted and an alternate source for "feedback" pressure must be provided. A standard AD-IP™ air dryer can be installed, however a separate "feedback" line with a single check must be installed as shown in Figure 3C.

The AD-IP™ DI drop in air dryer model incorporates the feedback line and single check as an integral part of the dryer and eliminates the need for these components as shown in Figures 2 & 3C.

OPERATION

GENERAL

The AD-IP™ air dryer alternates between two operational modes or "cycles" during operation: the *Charge Cycle* and the *Purge Cycle*. The following description of operation is separated into these "cycles" of operation.

CHARGE CYCLE (refer to Figure 4)

When the compressor is loaded (compressing air) compressed air, along with oil, oil vapor, water and water vapor flows through the compressor discharge line to the supply port of the air dryer body.

As air travels through the end cover assembly, its direction of flow changes several times, reducing the temperature, causing contaminants to condense and drop to the bottom or sump of the air dryer end cover.

After exiting the end cover, the air flows into the desiccant cartridge. Once in the desiccant cartridge air first flows through an oil separator located between the outer and inner shells of the cartridge. The separator removes water in liquid form as well as liquid oil and solid contaminants.

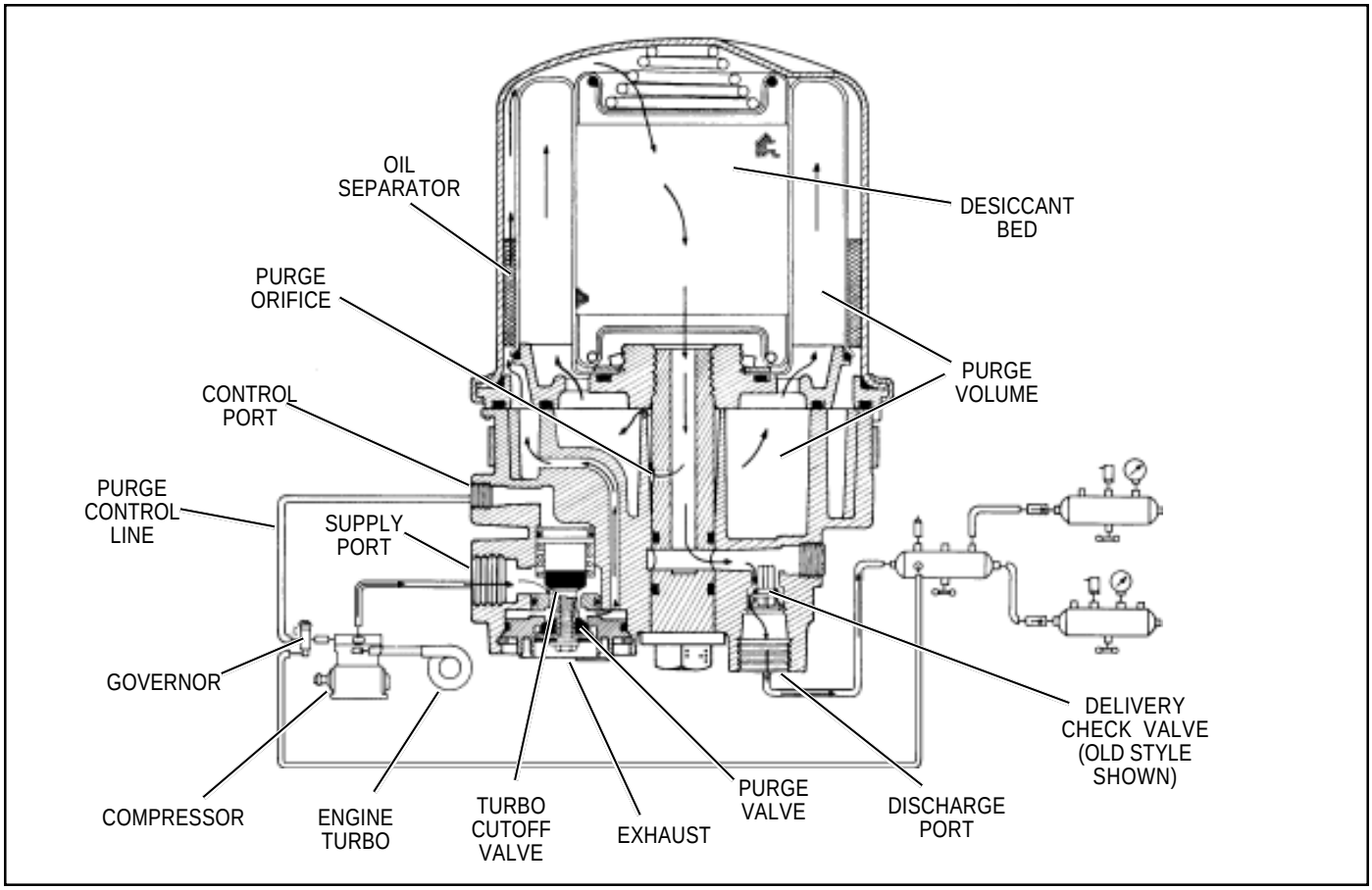

FIGURE 4 - ***AD-IP™ INTEGRAL PURGE AIR DRYER CHARGE CYCLE***

Air, along with the remaining water vapor, is further cooled as it exits the oil separator and continues to flow upward between the outer and inner shells. Upon reaching the top of the cartridge the air reverses its direction of flow and enters the desiccant drying bed. Air flowing down through the column of desiccant becomes progressively drier as water vapor adheres to the desiccant material in a process known as "ADSORPTION." The desiccant cartridge using the adsorption process typically removes most of the water vapor from the pressurized air.

Dry air exits the bottom of the desiccant cartridge and flows through the center of the bolt used to secure the cartridge to the end cover. Air flows down the center of the desiccant cartridge bolt, through a cross drilled passage and exits the air dryer delivery port through the delivery check valve. Note: the early end cover designs incorporated a vertical delivery check valve while the newer versions have a horizontal check valve. Both have the same function, but the components are not interchangeable. See Figure 7.

Dry air flowing through the center of the desiccant cartridge bolt also flows out the cross drilled purge orifice and into the purge volume.

The air dryer will remain in the charge cycle until the air brake system pressure builds to the governor cutout setting.

PURGE CYCLE (refer to Figure 5)

As air brake system pressure reaches the cutout setting of the governor, the governor unloads the compressor (air compression is stopped) and the purge cycle of the air dryer begins. When the governor unloads the compressor, it pressurizes the compressor unloader mechanism and the line connecting the governor unloader port to the AD-IP™ air dryer end cover control port. The purge piston moves in response to air pressure causing the purge valve to open to the atmosphere and the turbo cutoff valve to close off the supply of air from the compressor (this will be further discussed in the *Turbo Cutoff Feature* section). Water and contaminants in the end cover sump are expelled immediately when the purge valve opens. Also, air which was flowing through the desiccant cartridge changes direction and begins to flow toward the open purge valve. Liquid oil and solid contaminants collected by the oil separator are removed by air flowing from the purge volume through the desiccant drying bed to the open purge valve.

The initial purge and desiccant cartridge decompression lasts only a few seconds and is evidenced by an audible burst of air at the AD-IP™ air dryer exhaust. No purging of air should occur after 30 seconds.

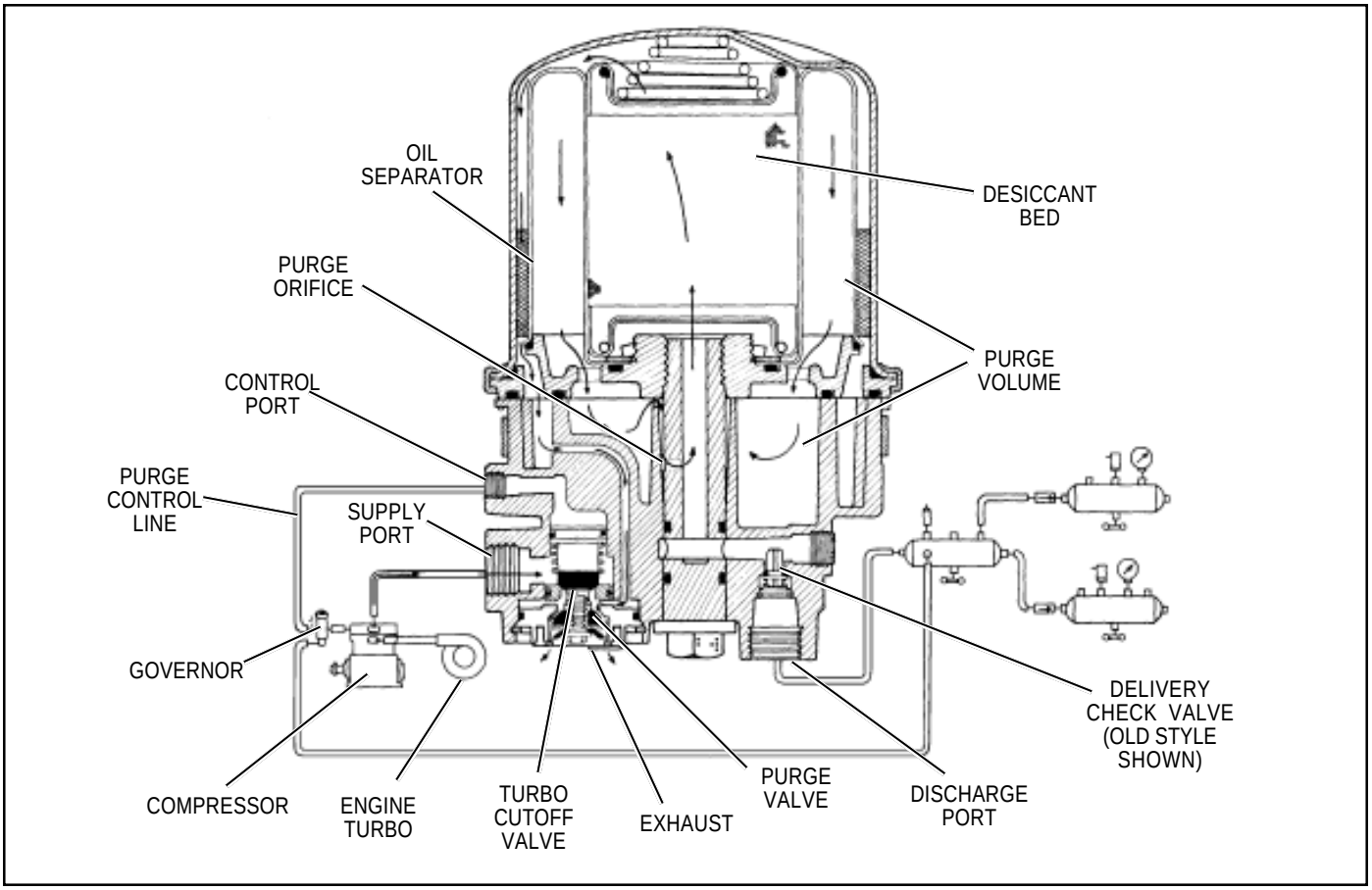

FIGURE 5 - ***AD-IP™ INTEGRAL PURGE AIR DRYER PURGE CYCLE***

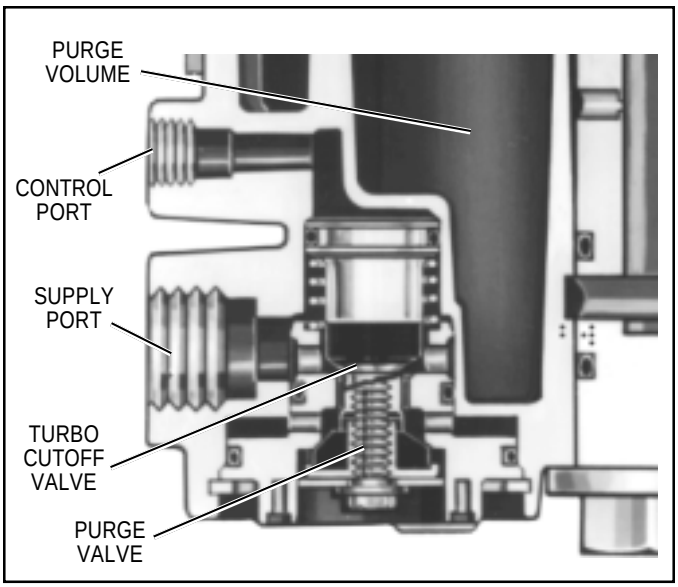

FIGURE 6 - ***AD-IP™ INTEGRAL PURGE AIR DRYER TURBO CUTOFF***

The actual reactivation of the desiccant drying bed begins as dry air flows from the purge volume through the purge orifice in the desiccant cartridge bolt, then through the center of the bolt and into the desiccant bed. Pressurized air from the purge volume expands after passing through the purge orifice; its pressure is lowered and its volume increased. The flow of dry air through the drying bed reactivates the desiccant material by removing the water vapor adhering to it. Generally 30 seconds are required for the entire purge volume of a standard AD-IP™ air dryer to flow through the desiccant drying bed.

The delivery check valve assembly prevents air pressure in the brake system from returning to the air dryer during the purge cycle. After the 30 second purge cycle is complete the desiccant has been reactivated or dried. The air dryer is ready for the next charge cycle to begin. However the purge valve will remain open and will not close until air brake system pressure is reduced and the governor signals the compressor to charge the system.

TURBO CUTOFF FEATURE (Refer to Figure 6)

The primary function of the turbo cutoff valve is to prevent loss of engine turbocharger air pressure through the AD-IP™ air dryer in systems where the compressor intake is

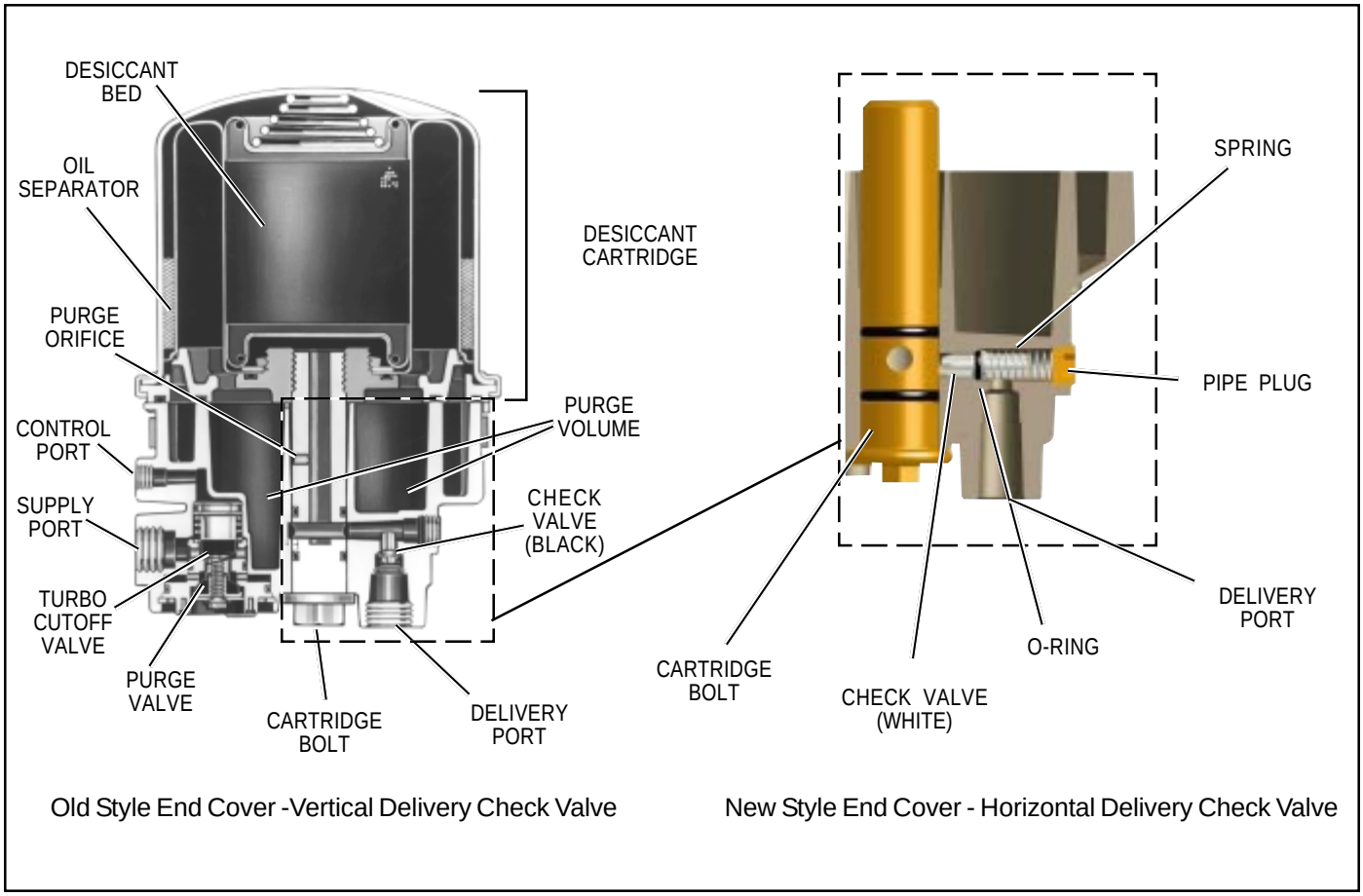

FIGURE 7 - ***AD-IP™ AIR DRYER SECTIONAL VIEW***

connected to the engine turbocharger. The turbo cutoff valve also removes the "puffing" of air out the open purge exhaust when a naturally aspirated, single cylinder compressor, equipped with an inlet check valve, is in use.

At the onset of the purge cycle, the downward travel of the purge piston is stopped when the turbo cutoff valve (tapered portion of purge piston) contacts its mating metal seat in the purge valve housing. With the turbo cutoff valve seated (closed position), air in the compressor discharge line and AD-IP™ air dryer inlet port cannot enter the air dryer. In this manner the turbo cutoff effectively maintains turbocharger boost pressure to the engine.

PREVENTIVE MAINTENANCE

Important: Review the warranty policy before performing any intrusive maintenance procedures. An extended warranty may be voided if intrusive maintenance is performed during this period. Note: It is acceptable for the purge valve to be maintained as necessary, i.e., the installation of a purge valve maintenance kit, without voiding the warranty.

Because no two vehicles operate under identical conditions, maintenance and maintenance intervals will vary. Experience is a valuable guide in determining the best maintenance interval for any one particular operation.

Every 900 operating hours, or 25,000 miles or three (3) months:

1. Check for moisture in the air brake system by opening reservoirs, drain cocks, or drain valves and checking for presence of water. If moisture is present, the desiccant cartridge may require replacement; however, the following conditions can also cause water accumulation and should be considered before replacing the desiccant:
   A. An outside air source has been used to charge the system. This air does not pass through the drying bed.
   B. Air usage is exceptionally high and not normal for a highway vehicle.

      This may be due to accessory air demands or some unusual air requirement that does not allow the compressor to load and unload (compressing and non-compressing cycle) in a normal fashion. Check for high air system leakage. If the vehicle vocation has changed it may be necessary to upgrade the compressor size. Refer to Appendix A, Table A and the column entitled Vehicle Vocation.
   C. The air dryer has been installed in a system that has been previously used without an air dryer. The system will be saturated with moisture and several weeks of operation may be required to dry it out.

Note: A small amount of oil in the system is normal and should not be considered as a reason to replace the desiccant cartridge; oil stained desiccant can function adequately.

2. Visually check for physical damage to the AD-IP™ air dryer such as chaffed or broken air and electrical lines and broken or missing parts.
3. Check mounting bolts for tightness. Re-torque to 270- 385 in.lbs.
4. Perform the *Operation & Leakage Tests* listed in this publication.

WARNING!

This air dryer is intended to remove moisture and other contaminants normally found in the air brake system. Do not inject alcohol, anti-freeze, or other de-icing substances into or upstream of the air dryer. Alcohol is removed by the dryer, but reduces the effectiveness of the device to dry air. Use of other substances can damage the air dryer and may void the warranty.

D. Location of the air dryer is too close to the air compressor. Refer to *"Locating AD-IP™ Air Dryer On Vehicle"* section and Appendix A, Table A, column 2 for discharge line length.

E. In areas where more than a 30 degree range of temperature occurs in one day, small amounts of water can temporarily accumulate in the air brake system due to condensation. Under these conditions, the presence of small amounts of moisture is normal and should not be considered as an indication that the dryer is not preforming properly.

OPERATION & LEAKAGE TESTS

1. Install a pressure gauge in the #1 reservoir. Check all lines and fittings leading to and from the air dryer for leakage and integrity. Test the delivery port check valve assembly by building the air system to governor cutout and observing a test air gauge installed in the #1 reservoir. Note the pressure on the air gauge after governor cutout pressure is reached, a rapid loss of pressure could indicate a failed delivery port check valve. This can be confirmed by shutting the engine off, draining system pressure to a point below governor cutin (usually not less than 95 psi), draining residual air pressure in the compressor discharge line. Remove the discharge line at the supply port of the dryer, and use soapy water to determine if air is flowing out of the supply port. Make sure there is no air pressure at the control port, by removing the line from the control port to the governor UNL port. The reservoir needs to have a least 50 PSIG for this test. If a 1" bubble forms within one second, the delivery check valve should be repaired. Remove the test gauge before returning the vehicle to service.

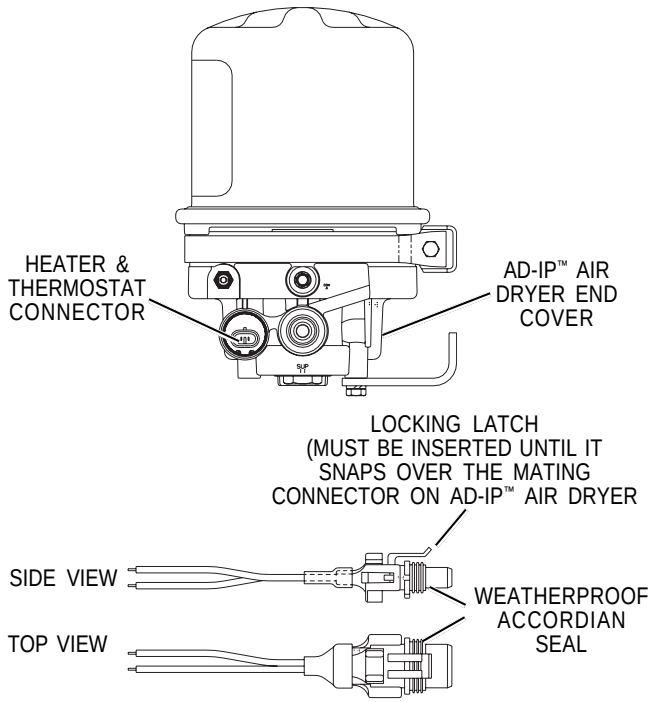

A two lead wire harness with attached weather resistant connector is supplied with all replacement and retrofit AD-IP™ air dryers. One of the two leads is connected to the engine "kill switch" or ignition while the other must be connected to a good vehicle ground. A fuse is installed in the lead carrying vehicle power; install a 10 amp fuse for 12 volt heaters and a 5 amp fuse for the 24 volt heater.

Use 14 AWG wire if it is necessary to lengthen the wire harness leads. Make certain all splices are weatherproofed. Tie wrap or support all electrical wires leading to the AD-IP™ air dryer.

FIGURE 8 - ***AD-IP™ AIR DRYER HEATER AND THERMOSTAT CONNECTOR***

2. Check for excessive leakage around the purge valve. With the compressor in loaded mode (compressing air), apply a soap solution to the purge valve exhaust port and observe that leakage does not exceed a 1" bubble in 1 second. If the leakage exceeds the maximum specified, repair the purge valve assembly.
3. Close all reservoir drain cocks. Build up system pressure to governor cutout and note that AD-IP™ air dryer purges with an audible escape of air. "Fan" the service brakes to reduce system air pressure to governor cut-in. Note that the system once again builds to full pressure and is followed by an AD-IP™ air dryer purge.
4. Check the operation of the end cover heater and thermostat assembly during cold weather operation as follows:

A. Electric Power to the Dryer

With the ignition or engine kill switch in the ON position, check for voltage to the heater and thermostat assembly using a voltmeter or test light. Unplug the electrical connector at the air dryer and place the test leads on each of the pins of the connector with the locking latch. If there is no voltage, look for a blown fuse, broken wires, or corrosion in the vehicle wiring harness. Check to see if a good ground path exists.

B. Thermostat and Heater Operation

Note: These tests are not required except in cold weather operation.

Turn off the ignition switch and cool the thermostat and heater assembly to below 35 degrees Fahrenheit. Using an ohmmeter, check the resistance between the electrical pins in the air dryer connector half. The resistance should be 1.5 to 3.0 ohms for the 12 volt heater assembly and 6.0 to 9.0 ohms for the 24 volt heater assembly.

Warm the thermostat and heater assembly to over 90 degrees Fahrenheit and again check the resistance. The resistance should exceed 1000 ohms. If the resistance values obtained are within the stated limits, the thermostat and heater assembly is operating properly. If the resistance values obtained are outside the stated limits, replace the heater and thermostat assembly.

REBUILDING THE AD-IP™ AIR DRYER

GENERAL

If, after completing the routine operation and leakage tests, it has been determined that one or more components of the air dryer requires replacement or maintenance, refer to the following list to find the appropriate kit(s).

When rebuilding or replacing components of the air dryer use only genuine Bendix® parts. For ease in servicing, the AD-IP™ air dryer has been designed so that any of the following maintenance kits can be installed without removing the air dryer from the vehicle.

MAINTENANCE KITS AVAILABLE:

065624 ..... SERVICE NEW DESICCANT CARTRIDGE KIT

This kit contains the parts necessary to change the desiccant cartridge only.

109493 ..... REMANUFACTURED DESICCANT CARTRIDGE KIT

This kit contains the parts necessary to change the desiccant cartridge only.

5001247 ..... MOUNTING BRACKET KIT

This kit contains the upper and lower brackets as well as the necessary hardware items to mount them.

109498 ..... CARTRIDGE BOLT KIT

Contains a replacement desiccant cartridge bolt and related o-rings.

5003547 ..... PURGE VALVE HOUSING MAINTENANCE KIT

This kit contains the parts necessary to rebuild the purge valve housing.

800404 ..... PURGE VALVE REPLACEMENT KIT

This kit contains the parts necessary to replace the purge valve.

5018313 ..... PURGE VALVE MAINTENANCE KIT

This kit contains the parts necessary to replace and relubricate the purge valve quad-ring and o-rings.

065626 .... SERVICE NEW PURGE VALVE HOUSING ASSEMBLY

Contains a service new assembly and related components to accomplish replacement.

109494 ..... DELIVERY CHECK VALVE MAINTENANCE KIT

This kit contains the parts necessary to replace the delivery port check valve.

109495 ..... 12V HEATER & THERMOSTAT KIT
109496 ..... 24V HEATER & THERMOSTAT KIT

Each contains a replacement heater and thermostat assembly and related components required for replacement.

GENERAL SAFETY GUIDELINES

WARNING! PLEASE READ AND FOLLOW THESE INSTRUCTIONS TO AVOID PERSONAL INJURY OR DEATH:

When working on or around a vehicle, the following general precautions should be observed at all times.

1. **Park the vehicle on a level surface, apply the parking brakes, and always block the wheels. Always wear safety glasses.**
2. **Stop the engine and remove ignition key when working under or around the vehicle. When working in the engine compartment, the engine should be shut off and the ignition key should be removed. Where circumstances require that the engine be in operation, EXTREME CAUTION should be used to prevent personal injury resulting from contact with moving, rotating, leaking, heated or electrically charged components.**
3. **Do not attempt to install, remove, disassemble or assemble a component until you have read and thoroughly understand the recommended procedures. Use only the proper tools and observe all precautions pertaining to use of those tools.**
4. **If the work is being performed on the vehicle's air brake system, or any auxiliary pressurized air systems, make certain to drain the air pressure from**

all reservoirs before beginning ANY work on the vehicle. If the vehicle is equipped with an AD-IS® air dryer system or a dryer reservoir module, be sure to drain the purge reservoir.

5. **Following the vehicle manufacturer's recommended procedures, deactivate the electrical system in a manner that safely removes all electrical power from the vehicle.**
6. **Never exceed manufacturer's recommended pressures.**
7. **Never connect or disconnect a hose or line containing pressure; it may whip. Never remove a component or plug unless you are certain all system pressure has been depleted.**
8. **Use only genuine Bendix® replacement parts, components and kits. Replacement hardware, tubing, hose, fittings, etc. must be of equivalent size, type and strength as original equipment and be designed specifically for such applications and systems.**
9. **Components with stripped threads or damaged parts should be replaced rather than repaired. Do not attempt repairs requiring machining or welding unless specifically stated and approved by the vehicle and component manufacturer.**
10. **Prior to returning the vehicle to service, make certain all components and systems are restored to their proper operating condition.**
11. **For vehicles with Antilock Traction Control (ATC), the ATC function must be disabled (ATC indicator lamp should be ON) prior to performing any vehicle maintenance where one or more wheels on a drive axle are lifted off the ground and moving.**

AD-IP™ AIR DRYER REMOVAL

This air dryer removal process is presented in the event it becomes necessary to replace the entire air dryer. **Normal service and parts replacement does not require removal of the air dryer from the vehicle.**

1. Park the vehicle on a level surface and prevent movement by means other than the brakes.
2. Drain **all** reservoirs to 0 p.s.i. — **Caution:** Compressor discharge line may still contain residual pressure.
3. Identify and disconnect the three air lines from the end cover and note the position of end cover ports relative to the vehicle.
4. Unplug the vehicle wiring harness from the heater and thermostat assembly connector on the end cover assembly.
5. Remove the four bolts that secure both the upper and lower mounting brackets to the vehicle, and remove the air dryer from the vehicle.
6. Mark the relationship of the saddle bracket (5) to the end cover assembly (6). Remove the 5/16" cap screw (1) and sleeve nut (3) securing the upper mounting strap (4) to the saddle bracket (5). Earlier models used washer and nut in place of the sleeve nut (3). Remove the upper mounting strap (4) from the end cover assembly (6).
7. Mark the relationship of the lower bracket (9) to the end cover assembly (6). Remove the two 3/8" end cover cap screws (7) and two washers (8) that retain the lower mounting bracket (9) to the end cover (6).

DISASSEMBLY

The following disassembly and assembly procedure is presented for reference purposes and presupposes that a major rebuild of the AD-IP™ air dryer is being undertaken. The replacement parts and maintenance kits available generally do not require full disassembly. The instructions provided with these parts and kits should be followed in lieu of the instructions presented here. Refer to Figure 9 during disassembly.

Caution: While performing service on the AD-IP™ air dryer, it is not recommended that a clamping device (vise, C-clamp, etc.) be used to hold any die cast aluminum component as damage may result. To hold the end cover, install a pipe nipple in the supply port and clamp the nipple into a vise.

1. Using an adjustable or socket wrench, loosen the desiccant cartridge bolt (10), then separate the desiccant cartridge (11) from the end cover (6). Pull the desiccant cartridge bolt out of the end cover (6).

   Caution: Disassembly of the desiccant cartridge assembly should not be attempted! Detail parts for the cartridge are not available and the cartridge contains a 150# spring which can not be mechanically caged.
2. Remove both o-rings (12 & 13) from the desiccant cartridge bolt.
3. Remove the retaining ring (14) that secures the purge valve assembly (15) in the end cover (6).
4. Remove the 1/4" shoulder bolt (16) from the bottom of the purge valve housing assembly (19) using a 3/8" socket wrench and a large blade screw driver, inserted in the slot on top of the purge piston (20). Remove the exhaust diaphragm (17), and the purge valve (18) from the purge valve housing (19).
5. Remove the o-rings (23 & 24) from the purge valve housing (19). Discharge Line Unloader (DLU) models do not have o-ring (23).
6. Remove the purge piston (20) and the return spring (22).
7. Remove the o-ring (21) from the purge piston (20).

8. **Vertical check valve models:** Remove the retaining ring (25) that secures the delivery check valve assembly in the end cover (6). Remove and separate the perforated plate (26), spring (27), check valve body (28) and o-ring (29).
9. **Horizontal check valve models:** Remove delivery check valve plug (34) that secures the check valve assembly in the end cover (6). Remove the spring (35), check valve (36) and o-ring (2).
10. Remove the retaining ring (30) that secures the heater and thermostat assembly (31) in the end cover (6). Gently pull the heater and thermostat (31) out of the end cover (6) and remove the o-ring (32).
11. Using a 9/16" wrench, remove the safety valve assembly (33) from the end cover (6).

CLEANING & INSPECTION

1. Using mineral spirits or an equivalent solvent, clean and thoroughly dry all metal parts except the desiccant cartridge.
2. Inspect the interior and exterior of all metal parts that will be reused for severe corrosion, pitting and cracks. Superficial corrosion and or pitting on the exterior portion of the end cover is acceptable.
3. Inspect the bores of both the end cover and the purge valve housing for deep scuffing or gouges.
4. Make certain that all purge valve housing and end cover passages are open and free of obstructions.
5. Inspect the pipe threads in the end cover. Make certain they are clean and free of thread sealant.
6. Inspect the purge valve housing bore and seats for excessive wear and scuffing.
7. Inspect the purge valve piston seat for excessive wear.
8. Make certain that the purge orifice in the cartridge bolt is open and free of obstructions.
9. Inspect all air line fittings for corrosion. Clean all old thread sealant from the pipe threads.
10. All o-rings removed should be discarded and replaced with new o-rings provided in appropriate kit(s).

ASSEMBLY

Prior to assembly, coat all o-rings, o-ring grooves, and bores with a generous amount of silicone grease. (Refer to Figures 9 and 10 during assembly unless otherwise advised.)

1. Install the quad ring (21) in its groove on the O.D. of the purge piston (20). Place the return spring (22) in the bore of the purge valve housing (19), then insert the purge piston (20) into the I.D. of the spring (22).
2. Install and center the exhaust diaphragm (17) over the shoulder bolt (16) making certain that the diaphragm ID is over the bolt shoulder. Then install the purge valve (18) on the shoulder bolt making certain its metal support side is against the diaphragm (17).
3. Push the purge piston (20) into the housing (19) until it bottoms and insert a large blade screw driver in the piston's slotted head. While depressing the purge piston with the screw driver, install the shoulder bolt (16) with exhaust diaphragm (17) and purge valve (18) in the piston. Torque the shoulder bolt (16) to between 60-80 in. lbs.
4. Install the two o-rings (23 & 24) on the purge valve housing (19) placing each in its appropriate location. <u>DLU models do not contain o-ring (23)</u>. Install the assembled purge valve housing in the end cover (6) while making certain the purge valve housing is fully seated against the end cover. Secure the purge valve housing in the end cover using the retaining ring (14). Make certain the retaining ring is fully seated in its groove in the end cover (6).
5. Using a 9/16" wrench, install the safety valve assembly (33) into the end cover (6).
6. **Vertical check valve models:** Install the o-ring (29) on the check valve body (28) and push the o-ring down, over the 3 guide lands until it is in the o-ring groove of the check valve body (28). Install the check valve spring (27) on the check valve body so that the **small** coils of the spring slip over the check valve body. Install the assembled check valve body, o-ring, and spring (27, 28 & 29) in the end cover (6) so that the o-ring rests on its seat in the end cover (6) and the spring is visible. Install the perforated plate (26), in the end cover (6) and secure the check valve assembly using the retaining ring (25). Make certain the retaining ring is fully seated in its groove in the end cover (6).
7. **Horizontal check valve models:** Install o-ring (2) onto check valve (36). Place the check valve in the delivery check valve port of the end cover (6). Install the spring (35) over the delivery check valve (36) and secure with the delivery check valve plug (34).
8. Install the o-ring (32) on the heater and thermostat assembly (31). After making certain the sponge rubber cushion is positioned between the connector body and thermostat, gently push the heater and thermostat assembly (31) into the end cover (6), making certain the heating element enters the small diameter bore in the larger heater and thermostat bore in the end cover (6). Secure the heater and thermostat assembly in the body using the retaining ring (30). Make certain the retaining ring is fully seated in its groove in the end cover (6).
9. Install both o-rings (12 & 13) on the desiccant cartridge bolt (10) and using a twisting motion, insert the assembled desiccant cartridge bolt in the end cover (6).

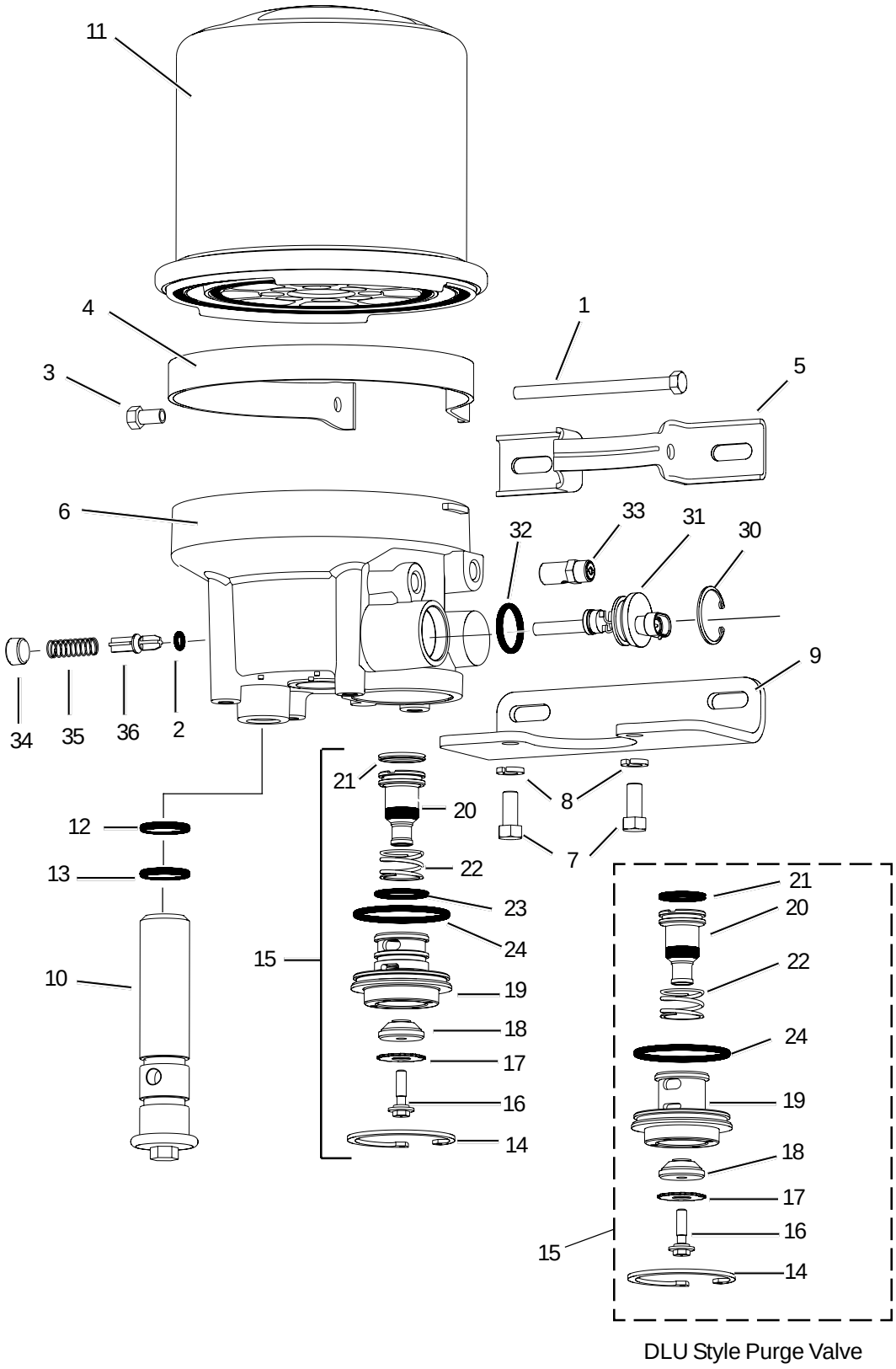

FIGURE 9 - ***AD-IP™ AIR DRYER INTERNAL COMPONENTS***

ITEM#	DESCRIPTION
1	5/16” Cap Screw
2	O-ring
3	5/16” Sleeve Nut
4	Mounting Strap
5	Saddle Bracket
6	End Cover
7	3/8” Cap Screw
8	3/8” Lock Washer
9	Lower Mounting Bracket
10	Cartridge Bolt
11	Desiccant Cartridge
12	O-ring
13	O-ring
14	Retaining Ring
15	Purge Valve Cartridge Assembly
16	Shoulder Bolt
17	Exhaust Diaphragm
18	Purge Valve
19	Purge Valve Housing
20	Purge Valve Piston
21	Quad Ring
22	Piston Return Spring
23	O-ring
24	O-ring
25	Retaining Ring
26	Perforated Plate
27	Check Ring Spring
28	Check Valve
29	O-ring
30	Retaining Ring
31	Heater & Thermostat Assembly
32	O-ring
33	Safety Valve Assembly
34	Delivery Check Valve Plug
35	Spring
36	Check Valve Body (white)

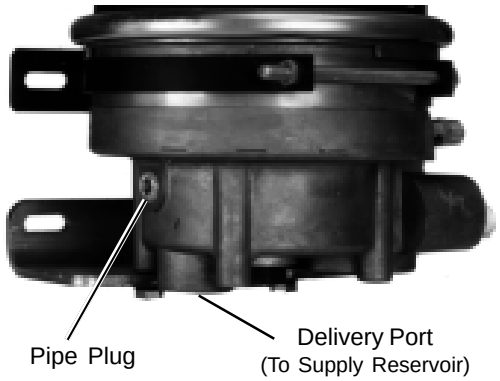

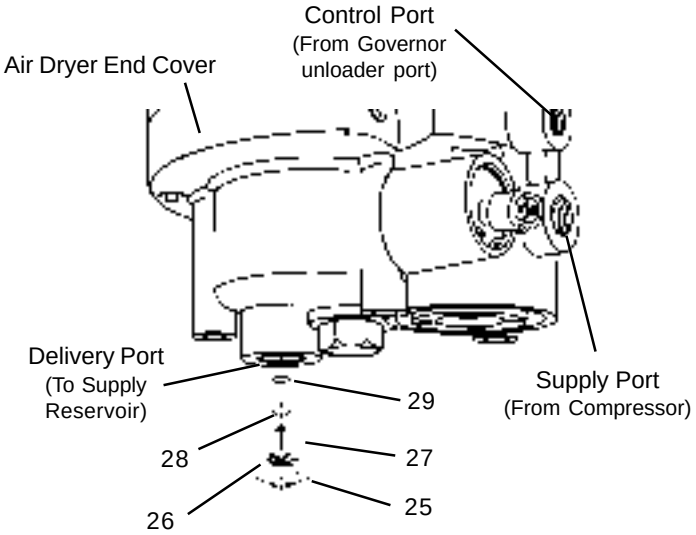

Old Style AD-IP End Cover - Vertical Delivery Check Valve

FIGURE 10 - ***AD-IP™ AIR DRYER INTERNAL COMPONENTS***

10. Install the desiccant cartridge (11) on the end cover (6) making certain the cartridge is properly seated and flush on the end cover.

    Note: It may be necessary to rotate the cartridge slightly until the anti-rotation lugs are properly aligned and allow the cartridge to rest flush against the end cover.

11. Using an adjustable wrench or a socket, tighten the desiccant cartridge bolt (10), to secure the desiccant cartridge (11) to the end cover (6). Torque the desiccant cartridge bolt to 65-75 ft. lbs. (40ft. lbs. minimum).

    Caution: Do not over torque.

AD-IP™ AIR DRYER INSTALLATION

1. Using the relationship marks made during step 7 of the "AD-IP™ AIR DRYER REMOVAL", install the lower mounting bracket (9) on the end cover (6) and secure it using the two 3/8" cap screws and washers (7 & 8). Torque the cap screws to 300-360 in.lbs.
2. Using the relationship marks made during step 6 of the *AD-IP™ Air Dryer Removal Procedure*, install the saddle bracket (5) and mounting strap (4) on the end cover (6), and using the 5/16" cap screw (1) and sleeve nut (3) secure the strap to the saddle bracket. Tighten the 5/16" nut on the upper mounting bracket. Torque to 60-100 in. lbs.
3. Install the AD-IP™ air dryer on the vehicle using the four bolts that secure both the upper and lower mounting brackets.
4. Reconnect the three airlines to the proper ports on the end cover (identified during step 3 of the *AD-IP™ Air Dryer Removal*).
5. Reconnect the vehicle wiring harness to the AD-IP™ air dryer heater and thermostat assembly connector by plugging it into the air dryer connector until its lock tab snaps in place.
6. Before placing vehicle back into service, perform the *Operation and Leakage Tests* stated elsewhere in this manual.

RETROFITTING THE AD-IP™ AIR DRYER

GENERAL

The following retrofit instructions are presented for reference purposes only since Bendix aftermarket retrofit and replacement air dryers are packaged with the most up-to-date installation instructions. The instructions packaged with the AD-IP™ air dryer should be followed in lieu of those presented here.

The preceding portion of this manual deals with "in-service" repair and/or replacement of the AD-IP™ air dryer. The portion of the manual that follows is concerned with installing an AD-IP™ air dryer on a vehicle not previously equipped with one.

VEHICLE APPLICATION REQUIREMENTS

The basic application requirements presented here apply to a standard air dryer installation. The majority of highway vehicles in use today will meet these basic requirements however, some may not. Examples of vehicles that may not meet the requirements include, refuse trucks, city coaches, bulk trailer unloading operations and other high air consumption systems. While the AD-IP™ air dryer can be used on these vehicles the standard installation procedure presented in this manual may require modification to assure proper operation and service life. Consult your local authorized Bendix parts outlet or sales representative for additional information.

Charge Cycle Time — The AD-IP™ air dryer is designed to provide clean, dry air for the brake system. When a vehicle's air system is used to operate non-brake air accessories it is necessary to determine that, during normal daily operation the compressor should recover from governor "cut-in" to governor "cut-out" (usually 100 psi to 120 psi) in 90 seconds or less at engine RPMs normal to the vehicle vocation. If the recovery time consistently exceeds this limit, it may be necessary to "bypass" the air accessory responsible for the high air usage. Consult your local authorized Bendix parts outlet or sales representative for additional information.

Purge Cycle Time — During normal vehicle operation, the air compressor must remain unloaded for a minimum of 30 seconds. This minimum purge time is required to ensure complete regeneration of the desiccant material. If the purge time is occasionally shorter than the times specified, no permanent ill effect should be expected, however, if the purge time is consistently less than the minimum, an accessory bypass system must be installed. Contact the nearest authorized Bendix parts outlet or Bendix representative for additional information. **Note:** Reservoir Volume - Total vehicle reservoir volume can impact the Charge and Purge Cycle time. The chart below can be used as a guide in determining if additional help is required.

Total Vehicle Reservoir Volume	Requirement
Less than 9,000 cu. in.	Standard AD-IP™ Air Dryer
9,000 - 12,500 cu. in.	Extended Purge AD-IP™ Air Dryer
Greater than 12,500 cu. in.	Contact Bendix Rep. or Bendix Engineering

Air Compressor Size — Although the AD-IP™ air dryer can be used in conjunction with larger compressors, it was designed primarily for units rated for up to 30 CFM. It is recommended that when using the AD-IP™ air dryer with a compressor which has a rated displacement exceeding 30

CFM that an authorized Bendix parts outlet or Bendix marketing representative be contacted for assistance.

Holset "E or QE" Type Air Compressors - In order for these Holset compressors to function properly when installed with an AD-IP™ air dryer, the required Holset feedback line and single check valve must be used. The standard AD-IP™ air dryer can be used with a separate feedback line and single check OR the AD-IP™ DI (Drop In) air dryer model can be used. With AD-IP™ DI drop in air dryer in use the separate feed back line and single check valve can be eliminated since these components are part of the air dryer. Refer to Figures 2 & 3.

VEHICLE PREPARATION

1. Park the vehicle on a level surface and prevent movement by means other than the brakes.
2. Drain all reservoirs to 0 p.s.i.

LOCATING AD-IP™ AIR DRYER ON VEHICLE

1. The AD-IP™ air dryer must be mounted vertically (purge exhaust toward road surface) outside the engine compartment in an area of air flow while the vehicle is in motion. The AD-IP™ air dryer must not be exposed to direct wheel splash. If the air dryer is located directly behind the axle, a mud flap is required.
2. Maintain a minimum clearance of 12" between the air dryer and any potential heat source (e.g. vehicle exhaust). If this is not feasible, a heat shield must be used.
3. Make certain that adequate clearance from moving components (e.g. drive shaft, suspension, pitman arm, etc.) is provided.
4. Locate the air dryer on vehicle so that a minimum of 1/2" clearance above the air dryer is available to allow desiccant cartridge removal. A minimum of 8" clearance below the air dryer is required to allow for desiccant cartridge bolt removal.
5. When choosing the mounting location for the AD-IP™ air dryer, note the discharge line length requirements stated under the heading *Connecting the Air Lines*, elsewhere in this manual.

   Important Note: Under normal operating conditions, the maximum inlet air temperature for the AD-IP™ air dryer is 160 degrees Fahrenheit.
6. If possible, locate the AD-IP™ air dryer so that the purge exhaust does not expel contaminants on vehicle components. If this is not feasible, the purge exhaust may be redirected away from the vehicle by installing an optional special exhaust cover (pc. no. 112609). The exhaust cover is available as a separate item from authorized Bendix parts outlets. A 1" ID hose can be clamped on this special exhaust cover to allow the exhaust to be redirected.

MOUNTING THE AD-IP™ AIR DRYER (Refer to Figure 10)

1. Install the lower mounting bracket on the AD-IP™ air dryer. To accomplish this, it will be necessary to choose two, of the four available, mounting holes. To determine which two holes to utilize to attach the lower bracket, take into consideration the piping connections required to install the AD-IP™ air dryer and use those that will best position the unit for ease of installation. Utilizing the two cap screws and washers provided with the AD-IP™ air dryer retrofit unit, attach the lower mounting bracket and torque to 300-360 in. lbs.

   Note: The bracket mounting holes in the end cover may not be pre-tapped. In this case the mounting bolt will self tap the holes on initial installation.
2. Assemble the mounting strap (4) and saddle bracket (5) as illustrated, by utilizing the 5/16" cap screw (1) and sleeve nut (3) provided. Place the upper bracket strap in the end cover channel provided for it, then install the saddle bracket and secure the strap to the saddle bracket using the cap screw (1) and sleeve nut (3) provided. Install, but do not tighten the cap screw at this time. Orient the strap and saddle bracket (5) so that it is in a flat plane with the lower bracket. Torque the 5/16" nut to 60-100 in. lbs. to tighten strap onto the shell.
3. Components and location used to mount the AD-IP™ air dryer on the vehicle must be rigid enough to minimize air dryer vibration.
4. Mount the AD-IP™ air dryer on the vehicle using 3/8" bolts (grade 5 min.) and washers. Torque to 25 ft. lbs. (300 in.lbs.)

CONNECTING THE AIR LINES

PURGE CONTROL LINE

1. Install a purge control air line having a minimum inside diameter of 3/16 inches between the AD-IP™ air dryer end cover control port and an unused unloader port on the governor. The control line must be connected directly to the governor and not in series with automatic drain valves, lubrication systems, etc.
2. The control line should slope downward to the end cover without forming sharp bends or "dips".

COMPRESSOR DISCHARGE LINE

GENERAL:

Refer to Appendix A, Table A for recommended discharge line lengths and sizes for various vehicle applications and vocations.

PURGE EXHAUST LINE

1. If it is necessary to direct AD-IP™ air dryer discharge contaminants away from vehicle components it will be necessary to purchase a special exhaust cover for the AD-IP™ air dryer (Pc. No. 112609) and install on the unit. A 1" (25.4 mm) I.D. hose can be clamped on the special AD-IP™ air dryer exhaust cover.

WIRING THE HEATER/THERMOSTAT

1. The air dryer is available with either a 12 or 24 volt heater which uses 90 watts of power. Determine the vehicle's electrical system voltage and make certain that the air dryer that is to be installed contains the same voltage heater. The air dryer's part number can be used to determine the air dryers heater voltage requirement. The heater voltage can also be identified by the color of the heater assembly connector as described in the table below.

Air Dryer Heater Voltage	Air Dryer Connector Identification
12 Volts	White (No other markings)
24 Volts	Gray, or White w/Red Dot

2. A two lead, 24 inch, wire harness with attached weather resistant connector is supplied with all retrofit and replacement AD-IP™ air dryers. Connect one of the two leads of the wire harness to the engine kill or ignition switch. The remaining lead of the wire harness must be connected to a good vehicle ground (not to the air dryer or its mounting bracket). A fuse must be installed in the power carrying wire; install a 10 amp fuse for 12 volt heaters and a 5 amp fuse for a 24 volt heater.
3. Use 14 gauge wire if it is necessary to lengthen the wire harness provided with the AD-IP™ air dryer. Make certain all wire splices are waterproofed using the splice kit provided with all aftermarket AD-IP™ air dryers.
4. Tie wrap or support all electrical wires leading to the AD-IP™ air dryer at 6 - 8 inch intervals.

   Note: Wires should have sufficient slack and not completely taught.

INSTALLING AD-IP™ AIR DRYER WITH HOLSET COMPRESSOR

GENERAL

The vehicle installation guidelines presented in the previous section apply to all AD-IP™ air dryer installations. Vehicles equipped with the Holset Type E or QE compressor require the following additional considerations.

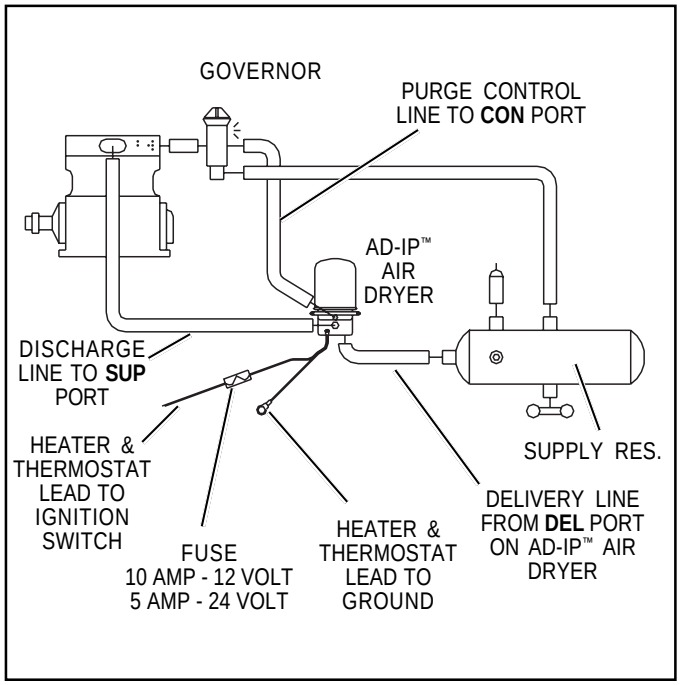

*FIGURE 10 - **AD-IP™ AIR DRYER INSTALLATION***

Standard AD-IP™ Air Dryer (Refer to Figure 3B)

If the AD-IP™ air dryer is being installed on a vehicle that did not previously have an air dryer or air system aftercooler, a separate feedback line and single check valve must be installed.

If the AD-IP™ air dryer is replacing an older style air dryer or air system aftercooler that did not incorporate an integral "Turbo Cutoff" device, the Holset ECON valve must be removed. The feedback line and single check valve must remain in place.

AD-IP™ DI "Drop In" Air Dryer Model (Refer to Figure 3C)

If the AD-IP™ DI "Drop In" air dryer is being installed on a vehicle that did not previously have an air dryer or air system aftercooler, no additional considerations are necessary. Install the AD-IP™ DI drop in air dryer in the manner described in the previous section.

If the AD-IP™ DI drop in air dryer is replacing a standard AD-IP™ air dryer or air system aftercooler which incorporated an integral "Turbo Cutoff" device, the old feedback line and single check valve must be removed.

If the AD-IP™ DI drop in air dryer is replacing an older style air dryer or air system aftercooler that did not incorporate an integral "Turbo Cutoff" device, the Holset ECON valve and the old feedback line and single check valve must be removed.

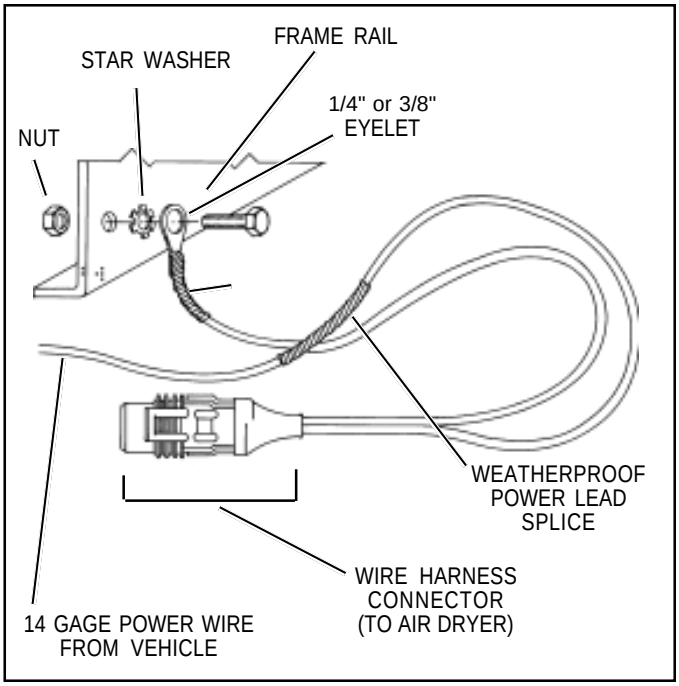

FIGURE 11 - ***WIRING - REMOTE POWER & LOCAL GROUND***

TESTING THE AD-IP™ AIR DRYER

Before placing the vehicle in service, perform the following tests.

1. Close all reservoir drain cocks.
2. Build up system pressure to governor cutout and note that the AD-IP™ air dryer purges with an audible escape of air.
3. "Fan" the service brakes to reduce system air pressure to governor cut-in. Note that the system once again builds to full pressure and is followed by a purge at the AD-IP™ air dryer exhaust.
4. It is recommended that the following items be tested for leakage to assure that the AD-IP™ air dryer will not cycle excessively.
   (A) Total air system leakage (See Bendix publication BW5057 "Air Brake Handbook.")
   (B) Compressor unloader mechanism.
   (C) Governor.
   (D) Drain cock and safety valve in first (supply) reservoir.
   (E) All air connections leading to and from the first (supply) reservoir.
   (F) Delivery check valve.

AD-IP™ AIR DRYER TROUBLESHOOTING CHART

SYMPTOMS	CAUSE	REMEDY
1. Dryer is constantly "cycling" or purging. Dryer purges frequently (every 4 minutes or less while vehicle is idling).	A. Excessive system leakage. IMPORTANT: Note whether air pressure loss is shown on dash gauge(s). Pressure loss shown on gauges is caused by service brake system or component leakage. Pressure loss NOT SHOWN on gauges is caused by supply system or component leakage.	A. If leakage IS SHOWN on gauges test for excessive service brake system leakage. Allowable leakage: Single vehicle - 1 psi/minute either service reservoir. Tractor trailer - 3 psi/minute either service reservoir. Repair and retest as required. 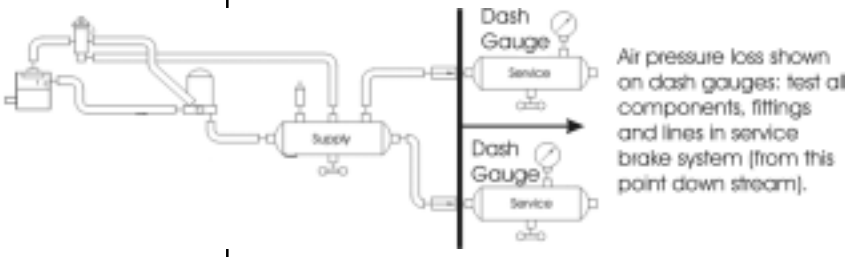 B. If leakage is NOT SHOWN on gauges test for excessive supply system leakage. 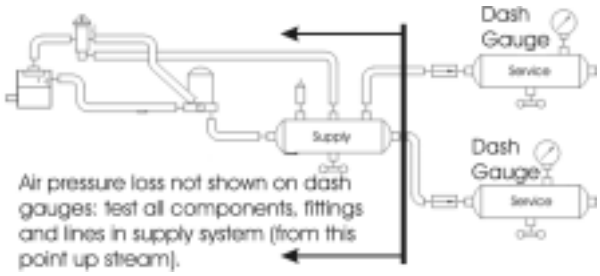 Remove drain cock or valve in supply reservoir (wet tank) and install air gauge. Build system pressure, allow air dryer to purge and observe air gauge in supply reservoir. Pressure drop should not exceed 1 psi per minute. **Perform tests 1 to 6 in the order presented.** 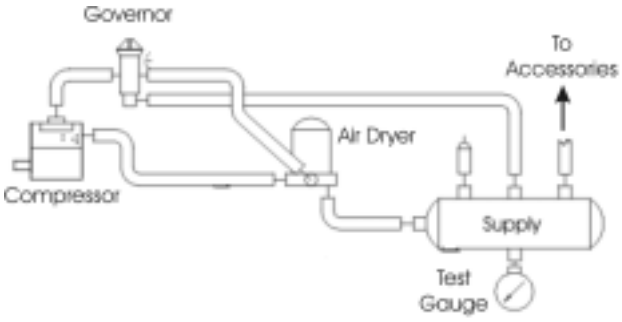

AD-IP™ AIR DRYER TROUBLESHOOTING CHART (Continued)

SYMPTOMS	CAUSE	REMEDY
1. Dryer is constantly "cycling" or purging. Dryer purges frequently (every 4 minutes or less while vehicle is idling) (continued).		1. Test fittings, hoses, lines and connections. Apply soap solution to detect excessive leakage. Tighten or replace as needed then repeat the air dryer charge-purge cycle and observe the gauge installed in the supply reservoir. If leakage is within limits remove gauge from reservoir and replace drain cock or valve. If excessive leakage is detected, continue testing. 2. Test accessories connected to supply reservoir. Drain all air pressure from system, disconnect all air lines leading to accessories (fan clutch, wipers, air seats, etc.) and plug the reservoir at disconnection point. Build air system pressure until air dryer purges and observe supply reservoir gauge. If leakage is no longer excessive, repair or replace leaking accessory. If excessive leakage is detected, continue testing. 3. Test governor leakage. Build system pressure to governor cut-out, turn off engine and apply soap solution to governor exhaust port and around cap. Leakage should not exceed a 1 in. bubble in 5 seconds. Reduce system pressure to 80 psi or less, and re-apply soap solution. Leakage should not exceed a 1 in. bubble in 5 seconds. If excessive leakage is detected in either test, repair or replace governor. 4. Test compressor unloader leakage. Drain all air pressure from system and remove the governor from the compressor. Temporarily plug the governor unloader port or air line that mated with, or connected to, the compressor. Build air system pressure until air dryer purges then IMMEDIATELY SHUT OFF THE ENGINE. Observe the air gauge in the supply reservoir. If leakage is within limits, replace the compressor unloaders. Re-connect the governor to the compressor (after removing plug installed in governor) and retest while observing supply reservoir gauge. If excessive leakage is detected, continue testing. 5. Test air dryer purge valve and outlet (delivery) check valve. Drain all air pressure from system, remove the control line connection at the air dryer and plug the end of the air line leading to the governor (not the air dryer control port). Build system pressure to governor cut-out and observe air gauge. If little or no pressure drop is observed replace the air dryer check valve. If pressure drop continues, apply soap solution to air dryer purge exhaust and purge control port (where the control line was removed). Leakage should not exceed a 1 in. bubble in 5 seconds. If leakage is excessive repair or replace purge valve assembly.

AD-IP™ AIR DRYER TROUBLESHOOTING CHART (Continued)

SYMPTOMS	CAUSE	REMEDY
1. Dryer is constantly "cycling" or purging. Dryer purges frequently (every 4 minutes or less while vehicle is idling) (continued).		6. With gauge installed at RES port of governor, pressure should not drop below "Cut-In" pressure at the onset of the compressor "Unloaded" cycle. If pressure drops, check for "kinks" or restrictions in line connected to RES port. Line connected to RES port on governor must be same diameter, or preferably larger than, lines connected to UNL port(s) on governor.
	B. Holset "E" type compressor.	B. Test the Holset E Compressor unloader system with feedback line and check valve for proper operation. Make certain Holset ECON is not in use with the drop-in version of the air dryer, if so, remove and retest. 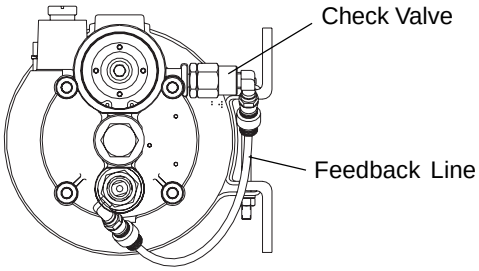 Typical Drop-In Air Dryer End Cover When installing a Bendix Drop-In air dryer in a system equipped with a Holset E or QE compressor, remove the Holset ECON valve along with its feedback and governor control line. 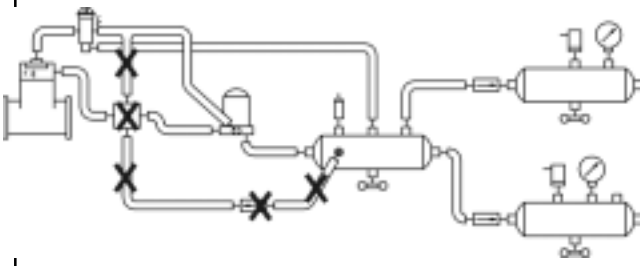
2. Water and/or Oil in Supply or Service Reservoir.	A. Improper discharge line length or improper line material. Maximum air dryer inlet temperature is exceeded.	A. Refer to section entitled *Connecting the Air Lines* as well as Appendix A, Table A columns 1 & 2 then check line size and length.
	B. Air system charged from outside air source (outside air not passing through air dryer).	B. If system must have outside air fill provision, outside air should pass through air dryer. This practice should be minimized.
	C. Air dryer not purging (see Symptom #5).	C. See Symptom #5.

AD-IP™ AIR DRYER TROUBLESHOOTING CHART (Continued)

SYMPTOMS	CAUSE	REMEDY
2. Water and/or Oil in Supply or Service Reservoir (continued).	D. Purge (air exhaust) time insufficient due to excessive system leakage (see causes for Symptom #1).	D. Check causes and remedies for Symptom #1.
	E. Excessive air usage, duty cycle too high - Air dryer not compatible with vehicle air system requirement (Improper air dryer/vehicle application). NOTE: Duty Cycle is the ratio of time the compressor spends building air to total engine running time. Air compressors are designed to build air (run "loaded") up to 25% of the time. Higher duty cycles cause conditions that affect air brake charging system performance which may require additional maintenance. Factors that add to the duty cycle are: air suspension, additional air accessories, use of an undersized compressor, frequent stops, excessive leakage from fittings, connections, lines, chambers or valves, etc.	E. See Appendix A, Table A, column 1, for recommended compressor sizes. If the compressor is "too small" for the vehicle vocation (for example, where a vehicle's vocation has changed or service conditions exceed the original vehicle or engine OE spec's) then upgrade the compressor. Note: The costs incurred (e.g. installing a larger capacity compressor, etc.) are not covered under original compressor warranty. Charge Cycle Time - The AD-IP™ air dryer is designed to provide clean, dry air for the brake system. When a vehicle's air system is used to operate non-brake air accessories it is necessary to determine that; during normal, daily operation the compressor should recover from governor "cut-in" to governor "cut-out" (usually 100 psi to 120 psi) in 90 seconds or less at engine RPM's commensurate with the vehicle vocation. If the recovery time consistently exceeds this limit, it may be necessary to "bypass" the air accessory responsible for the high air usage. An example of where a by-pass system would be required is when the compressor is used to pressurize a tank trailer for purposes of off-loading product. Consult your local authorized Bendix parts outlet or sales representative for additional information. Purge Cycle Time - During normal vehicle operation, the air compressor **must remain unloaded for a minimum of 30 seconds.** This minimum purge time is required to ensure complete regeneration of the desiccant material. If the purge time is consistently less than the minimum, an accessory by-pass system must be installed. Consult your local authorized Bendix parts outlet or sales representative for additional information. Air Compressor Size - Although the AD-IP™ air dryer can be used in conjunction with larger compressors, it was designed primarily for units rated for up to 30 CFM. It is recommended that when using the AD-IP™ air dryer with a compressor which has a rated displacement exceeding 30 CFM that an authorized Bendix parts outlet or Bendix marketing representative be contacted for assistance.
	F. Air compressor discharge and/or air dryer inlet temperature too high.	F. Restricted discharge line. See Appendix A, Table A, column 1 & 2 for recommended sizes. If discharge line is restricted or more than 1/16" carbon build up is found, replace the discharge line. Replace as necessary.

AD-IP™ AIR DRYER TROUBLESHOOTING CHART (Continued)

SYMPTOMS	CAUSE	REMEDY
2. Water and/or Oil in Supply or Service Reservoir (continued).		Discharge Line Freeze-Up. The discharge line must maintain a constant slope down from the compressor to the air dryer inlet fitting to avoid low points where ice may form and block the flow. If, instead, ice blockages occur at the air dryer inlet, insulation may be added here, or if the inlet fitting is a typical 90 degree fitting, it may be changed to a straight or 45 degree fitting. For more information on how to help prevent discharge line freeze-ups, see Bendix Bulletins TCH-08-21 and TCH-08-22. Shorter discharge line lengths or insulation may be required in cold climates. Insufficient coolant flow through compressor. Inspect coolant line. Replace as necessary (I.D. is 1/2" min.). Inspect the coolant lines for kinks and restrictions and fittings for restrictions. Replace as necessary. Verify coolant lines go from engine block to compressor and back to the water pump. Repair as necessary. Restricted air inlet (not enough air to compressor). Check compressor air inlet line for restrictions, brittleness, soft or sagging hose conditions etc. Repair as necessary. Inlet line size is 3/4 ID. Maximum restriction requirement for compressors is 25 inches of water. Check the engine air filter and service if necessary (if possible, check the air filter usage indicator). Poorly filtered inlet air (poor air quality to compressor). Check for leaking, damaged or malfunctioning compressor air inlet components (e.g. induction line, fittings, gaskets, filter bodies, etc.). Repair inlet components as needed. Note: Dirt ingestion will damage compressor and is not covered under warranty. If you found excessive oil present in the service reservoir and you did not find any issues above, the compressor may be passing oil. Replace compressor. If still under warranty, follow normal warranty process.
	G. Compressor malfunction.	G. If you found excessive oil present in the service reservoir and you did not find any issues above, the compressor may be passing oil. Test the compressor using the BASIC cup method as described in the Bendix compressor service manual and referred to in Appendix A, Table A, column 5. Replace compressor. If still under warranty, follow normal warranty process.
	H. Air by-passes desiccant cartridge assembly.	H. If vehicle uses Holset compressor, inspect feedback check valve for proper installation and operation.

AD-IP™ AIR DRYER TROUBLESHOOTING CHART (Continued)

SYMPTOMS	CAUSE	REMEDY
2. Water and/or Oil in Supply or Service Reservoir (continued).		When replacing the desiccant cartridge, make sure desiccant cartridge assembly is properly installed and sealing rings are in place on mounting surface of desiccant cartridge. 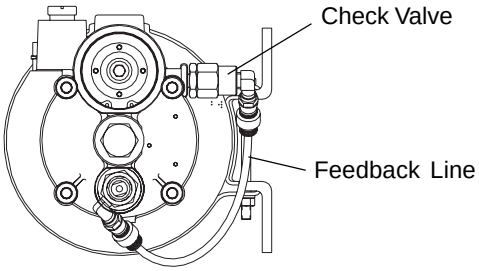 Typical Drop-In Air Dryer End Cover
	I. Desiccant requires replacement.	I. Replace desiccant cartridge assembly. Refer to Appendix A, Table A columns 3 & 4 for recommended intervals.
3. Oil present at air dryer purge exhaust or cartridge during maintenance.	A. Air brake charging system is functioning normally.	A. Air dryers remove water and oil from the air brake charging system. A small amount of oil is normal. Check that regular maintenance is being performed and that the amount of oil in the air tanks (reservoirs) is within the acceptable range shown on the BASIC cup (see also column 5 of Appendix A, Table A). Replace the air dryer cartridge as needed and return the vehicle to service.
4. Safety valve on air dryer "popping off" or exhausting air.	A. Restriction between air dryer and supply (first) reservoir.	A. Check to determine if air is reaching supply reservoir. Inspect for kinked tubing or hose. Check for undrilled or restricted hose or tubing fittings and repair or replace as needed.
	B. Air dryer safety valve malfunction.	B. Verify relief pressure is at vehicle or component manufacturer specifications. Replace if malfunctioning.
	C. Desiccant cartridge maintenance required.	C. Refer to Appendix A Table A and column 3. Check compressor for excessive oil passing and/or correct compressor installation. Repair or replace as necessary. Replace desiccant cartridge.
	D. Malfunctioning discharge check valve in end cover of the AD-IP™ air dryer.	D. Test to determine if air is passing through check valve. Repair or replace.
	E. Excessive pressure pulsations from compressor. (Typical single cylinder type).	E. Increase volume in discharge line by increasing length or diameter. Add a ping tank (small reservoir).

AD-IP™ AIR DRYER TROUBLESHOOTING CHART (Continued)

SYMPTOMS	CAUSE	REMEDY
4. Safety valve on air dryer "popping off" or exhausting air (continued).	F. Governor malfunction. Missing or restricted governor control line installation.	F. Test governor operation and/or inspect the control line leading from the governor UNL (unloader) port to the air dryer control port.
5. Constant exhaust of air at air dryer purge valve exhaust. (Charge mode.)	A. Air dryer purge valve leaking excessively.	A. With compressor loaded, apply soap solution on purge valve exhaust, to test for excessive leakage. Refer to Technical Bulletin TCH-008-040. Repair purge valve as necessary.
	B. Compressor fails to unload (stop compressing air) and air dryer purge exhaust makes "sputtering" or "popping" sound.	B. Confirm failure to unload by increasing & decreasing engine RPM and noting change in the rate of leakage and intensity of accompanying leakage sound. Repair/replace compressor unloaders.
	C. Purge control line connected to reservoir or exhaust port of governor.	C. Purge control line must be connected to unloader port of governor.
	D. Purge valve frozen open - malfunctioning heater and thermostat, wiring, blown fuse.	D. Test heater and thermostat as described in *Preventative Maintenance* Section.
	E. Excessive system leakage.	E. See Symptom #1.
	F. Purge valve stays open - supply air leaks to control side.	F. Repair purge valve and housing.
6. Can not build system air pressure.	A. Inlet and outlet air connections reversed.	A. Connect compressor discharge to air dryer supply port. Reconnect lines properly.
	B. Check valve between air dryer and first reservoir.	B. Test check valve for proper operation. Repair or replace as necessary.
	C. Kinked or blocked (plugged) discharge line.	C. Check to determine if air passes through discharge line. Check for kinks, bends, excessive carbon deposits, or ice blockage.
	D. Excessive bends in discharge line (water collects and freezes).	D. Discharge line should be constantly sloping from compressor to air dryer with as few bends as possible.
	E. Refer to Symptom 4, Causes E & F.	E. Refer to Symptom #4, Remedies E & F.
7. Air dryer does not purge or exhaust air.	A. Missing, broken, kinked, frozen, plugged or disconnected purge control line.	A. Inspect control line from governor UNL (unloader) port to control port of air dryer. Test to determine if air flows through purge control line when compressor unloaded. Check for undrilled fittings. (See Symptom #4, Remedy C.)
	B. Faulty air dryer purge valve.	B. After determining air reaches purge valve (Remedy A above), repair purge valve.
	C. See Causes, B, E, G for Symptom #4.	C. Refer to Remedies B, E, G for Symptom #4.

AD-IP™ AIR DRYER TROUBLESHOOTING CHART (Continued)

SYMPTOMS	CAUSE	REMEDY
8. Desiccant material being expelled from air dryer purge valve exhaust (may look like whitish liquid or paste or small beads.) - OR - Unsatisfactory desiccant life.	A. This symptom is almost always accompanied by one or more of Symptoms 1, 2, 3, 4 and 5. See related causes for these symptoms above.	A. See Causes and Remedies for Symptoms 1, 2, 3, 4 and 5.
	B. Air dryer not securely mounted. (Excessive vibration.)	B. Vibration should be held to minimum. Add bracket supports or change air dryer mounting location if necessary.
	C. Malfunctioning or saturated desiccant cartridge.	C. Replace desiccant cartridge assembly.
	D. Compressor passing excessive oil.	D. Check for proper compressor installation; if symptoms persist, replace compressor.
	E. Desiccant cartridge not assembled properly to end cover. (Loose attachment)	E. Check the torque on the desiccant cartridge to end cover attachment. Refer to assembly section of this data sheet.
9. "Pinging" noise excessive during compressor loaded cycle.	A. Single cylinder compressor with high pulse cycles.	A. A slight "pinging" sound may be heard during system build up when a single cylinder compressor is used. If this sound is deemed objectionable, it can be reduced substantially by increasing the discharge line volume. This can be accomplished by adding an additional four feet of discharge line or adding a 90 cubic inch reservoir between the compressor and the AD-IP™ air dryer. IMPORTANT: Do not exceed the line lengths requirements specified in this manual.
10. Constant seepage of air at air dryer purge valve exhaust (non-charging mode.)	A. Defective check valve assembly in AD-IP™ air dryer end cover.	A. Refer to Remedy C, Symptom #1.
	B. Leaking Turbo Cutoff valve.	B. Repair or replace purge valve assembly.
	C. Leaking purge valve control piston o-ring.	C. Repair or replace purge valve assembly.
11. The air dryer purge piston cycles rapidly in the compressor unloaded (non-compressing) mode.	A. Compressor fails to "unload".	A. Faulty governor installation; no air line from governor to compressor or line is kinked or restricted. Install or repair air line.

Appendix A

Table A: Maintenance Schedule and Usage Guidelines

Regularly scheduled maintenance is the single most important factor in maintaining the air brake charging system.

Vehicle Used for:	No. of Axles	Column 1 Typical Compressors Spec'd	Column 2 Discharge Line I.D.	Column 2 Discharge Line Length	Column 3 Recommended Air Dryer Cartridge Replacement[1]	Column 4 Recommended Reservoir Drain Schedule[2]	Column 5 Acceptable Reservoir Oil Contents[3] at Regular Drain Interval
Low Air Use Compressor with less than 15% duty cycle e.g. Line haul single trailer w/o air suspension, air over hydraulic brakes.	5 or less	Bendix® Tu-Flo® 750 air compressor Bendix® BA-921® air compressor Bendix® Tu-Flo® 550 air compressor Bendix® BA-922® or DuraFlo™ 596 air compressor	1/2 in. For oil carry-over control[4] suggested upgrades: 5/8 in.	6 ft. 9 ft.	Every 3 Years	Recommended Every Month - Max of every 90 days	BASIC test acceptable range: 3 oil units per month. See appendix A.
Compressor with up to 25% duty cycle e.g. Line haul single trailer with air suspension, school bus.	5 or less		1/2 in. For oil carry-over control[4] suggested upgrades: 5/8 in.	9 ft. 12 ft.			
High Air Use Compressor with up to 25% duty cycle e.g. Double/triple trailer, open highway coach/RV, (most) pick-up & delivery, yard or terminal jockey, off-highway, construction, loggers, concrete mixer, dump truck, fire truck.	8 or less		1/2 in. For oil carry-over control[4] suggested upgrades: 5/8 in.	12 ft. 15 ft.	Every 2 Years	Every Month	*For the BASIC Test Kit: Order Bendix P/N 5013711* BASIC test acceptable range: 5 oil units per month. See appendix A.
Compressor with up to 25% duty cycle e.g. City transit bus, refuse, bulk unloaders, low boys, urban region coach, central tire inflation.	12 or less		5/8 in. For oil carry-over control[4] suggested upgrades: 3/4 in.	12 ft. 15 ft.	Every Year		

Footnotes:

1 With increased air demand the air dryer cartridge needs to be replaced more often.

2 Use the drain valves to slowly drain all reservoirs to zero psi.

3 Allow the oil/water mixture to fully settle before measuring oil quantity.

4 To counter above normal temperatures at the air dryer inlet, (and resultant oil-vapor passing upstream in the air system) replace the discharge line with one of a larger diameter and/or longer length. This helps reduce the air's temperature. If sufficient cooling occurs, the oil-vapor condenses and can be removed by the air dryer. Discharge line upgrades are not covered under warranty. Note: To help prevent discharge line freeze-ups, shorter discharge line lengths or insulation may be required in cold climates. (See Bendix Bulletins TCH-08-21 and TCH-08-22.)

5 For certain vehicles/applications, where turbo-charged inlet air is used, a smaller size compressor may be permissible.

Note: Compressor and/or air dryer upgrades are recommended in cases where duty cycle is greater than the normal range (for the examples above).

For Bendix® Tu-Flo® 550 and 750 compressors, unloader service is recommended every 250,000 miles.

Appendix B

Additional Troubleshooting Information

The troubleshooting procedure presented on the following pages has been excerpted from a laminated card entitled: Troubleshooting Charging and Air Supply Systems. The complete card can be obtained from authorized Bendix parts outlets under literature number BW1779. It is presented here because of the air dryers connection to the supply air system and for convenience. The procedure is not all inclusive but rather represents the most commonly encountered complaints.

CONVENTIONAL SUPPLY SYSTEM & INTEGRAL PURGE AIR DRYER

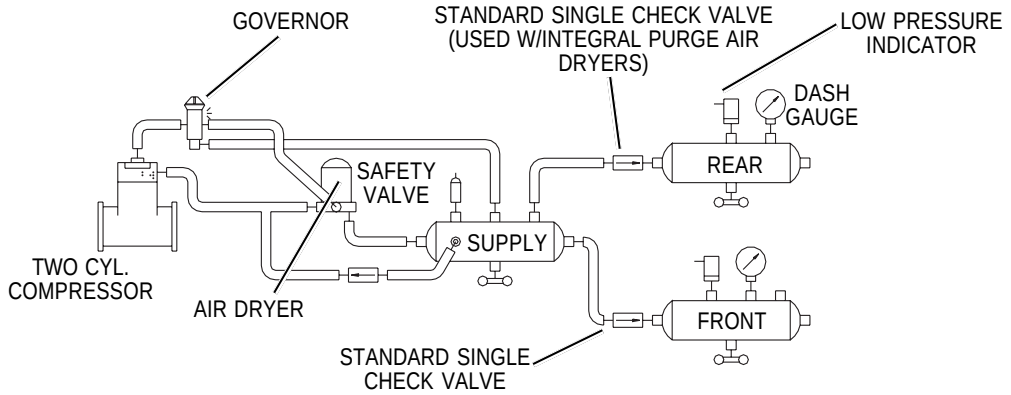

HOLSET TYPE "E & QE" COMPRESSOR WITH ECON VALVE

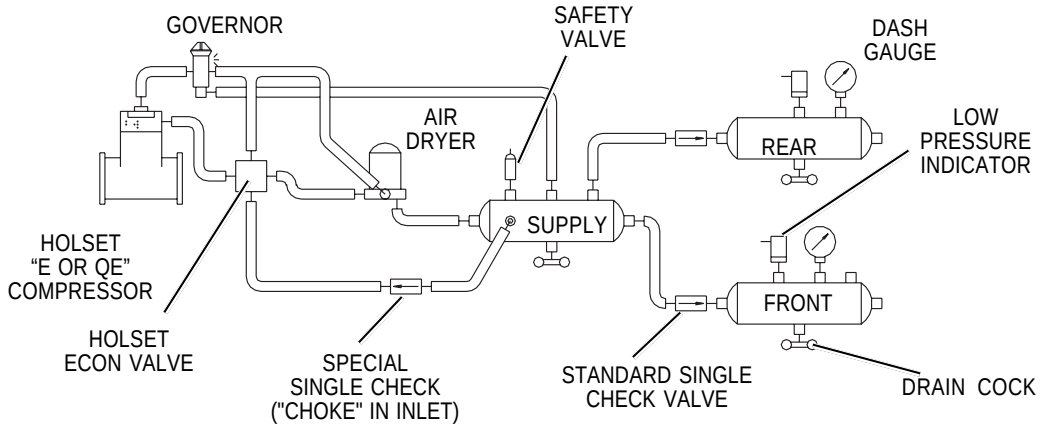

HOLSET TYPE "E & QE" COMPRESSOR W/O ECON VALVE

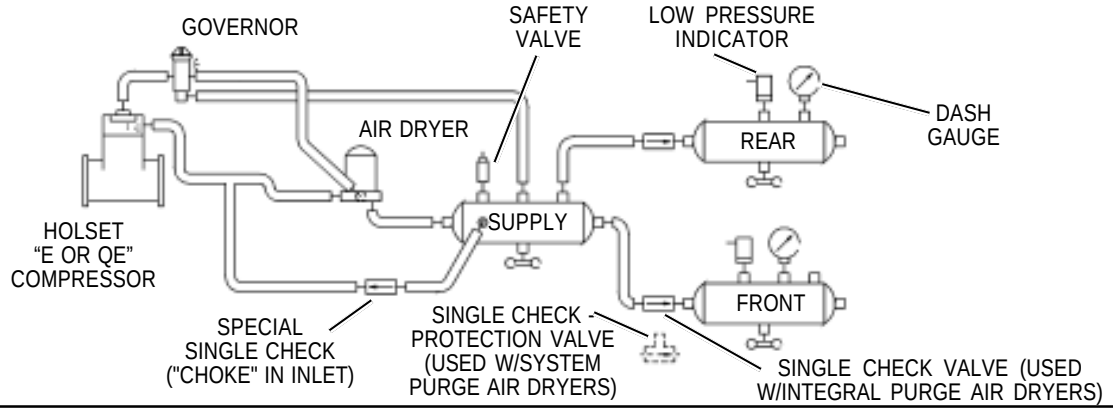

COMPLAINTS COMMON TO THE CHARGING & AIR SUPPLY SYSTEM

Complaint: Can Not Build System Pressure

- Discharge line plugged or restricted: see Common Test 1.
- Air pressure trapped between governor and compressor unloaders: see Common Test 2.
- Blow leakage at air dryer exhaust: see Common Test 3.

Complaint: Air System Builds Too Slow

- Discharge line restricted: see Common Test 1.
- Discharge line leakage: see Common Test 5.
- Air leaking at air dryer exhaust: see Common Test 3.
- Compressor head gasket failure: apply soap solution around cylinder head. If leakage between head and block noted repair or replace compressor.
- Air pressure trapped between governor and compressor unloaders: see Common Test 2.
- Air system leakage: see Common Test 4.

Complaint: Can Not Build System Pressure Above "X" psi.

- Blow leakage at compressor unloaders: remove all hardware from compressor inlet then remove governor. With 120 psi shop air applied to compressor unloader port listen for leakage at inlet. If noted, repair leak or replace compressor.
- Incorrect setting on governor: verify safety valve operation. Drain air from system, remove or disconnect governor from compressor and install gauge in governor unloader (UNL) port. Build system pressure and note when pressure on dash gauge and test gauge are equal. Should be equal at maximum setting of governor.
- Discharge line leakage: see Common Test 5.
- Air system leakage: see Common Test 4.
- Compressor head gasket failure: apply soap solution around cylinder head. If leakage between head and block noted repair or replace compressor.

Complaint: Air Dryer Cycles "ON & OFF" Constantly

This complaint caused by leakage, either service system or supply system. Service system leakage is shown on dash gauges supply system leakage is not. *Note: System purge air dryers will purge more often than those with integral purge volume.*

Service system leakage: see Common Test 4.

Supply system component leakage: drain system, install gauge and shop air hose in place of drain cock in supply reservoir. Fill system to 120 psi, shut off shop air and check leakage on following components in order presented:

- Compressor unloader leakage.
- Drain system, remove governor from compressor plug governor UNL port and re-test. If leakage OK repair compressor unloader mechanism or replace compressor. If leakage NOT OK then next.
- Holset ECON valve (used with Holset Type "E & QE" comp.) missing, malfunctioning, leaking.
- Is ECON valve required but missing? If YES, install, along with special Holset check valve w/choke. If NO and ECON valve present replace ECON valve and special check valve. If NO and ECON not required then next.
- Air dryer leakage: Remove line from air dryer inlet and with 120 psi in supply res. soap exhaust and inlet port of air dryer. If leakage greater than 1” bubble in 1 second at exhaust port, repair or replace check valve (on dryers with integral purge volume) or replace body assy. on system purge air dryers. If leakage greater than 1” bubble in 1 second at inlet port, repair or replace purge valve assy. (on dryers with integral purge volume) or replace turbo cut-off valve on system purge air dryers.

Complaint: System Pressure Goes to 150+ psi

- Drain air system to 0 psi, remove/disconnect governor from compressor. Start engine and note air pressure rise on dash gauges. Apply 120 psi shop air to compressor unloader port. If air pressure continues to rise, repair compressor unloaders or replace compressor. If air ceases to rise, repair or replace governor.

Complaint: Low Pressure Warning After Only 1 or 2 Applications

- Brakes out of adjustment: adjust brakes.
- Excessive system leakage on service (application) side of system: Build system pressure to 120 psi and shut off engine. With park brakes released, make full service application and note dash gauges for 2 minutes. Pressure drop on either gauge should not exceed 4 psi. (2 psi per min.) If pressure drop excessive, find leakage in service system, if OK, then next.
- Incorrect low pressure switch in use or setting incorrect: Build system to 120 psi. Engine OFF ignition ON, slowly drain air pressure from one service reservoir. Low pressure warning on at minimum 60 psi, maximum 10-15 psi less than governor cut-in pressure.

TESTS COMMON TO MORE THAN ONE COMPLAINT

1. **Discharge plugged or restricted**
- Connect temporary discharge line from comp. discharge port to supply res. & re-check build-up. If build-up OK replace plugged discharge line. If build-up NOT OK go to next cause.

2. **Air pressure trapped between governor and compressor**
- Verify safety valve operation then remove or disconnect governor from compressor & check build-up.
- If build-up OK, repair or replace governor or line between governor and compressor.
- If build-up NOT OK repair or replace compressor.

3. **Blow Leakage at Air Dryer Exhaust**
- Drain all air from supply reservoir then remove control air line from air dryer, plug line and plug control port in air dryer. Re-check build-up.
- If build-up OK, repair or replace governor or line between governor and air dryer.
- If build-up NOT OK, and below 32 deg. F, turn ignition ON and allow heater to warm air dryer then check build-up. If NOT OK, remove wire (connector or terminal) from air dryer. Using test light, check wire end or terminal for battery voltage with vehicle ignition ON. If voltage OK, repair or replace air dryer heater and thermostat. If voltage NOT OK, repair or replace the vehicle wire connected to air dryer. Retest build-up.
- If build-up still NOT OK or temp. above 32 deg. F, replace air dryer purge valve assembly.

4. **Air system leakage**
- Build system pressure to governor cut-out, wait 2 minutes for dryer purge completion. Note pressures on dash gauges then watch dash gauges for 2 minutes. Leakage not to exceed 2 psi in 2 mins. for truck, bus, tractor (no trailer).
- If leakage NOT OK on gauges, find leak(s) in service and park system and repair. Retest and if system purge air dryer in use and still not OK repair or replace dryer.
- If leakage OK on gauges, drain air from supply reservoir, remove drain cock and install air gauge. Build system air in supply reservoir and note leakage. If OK continue checking. If NOT OK find leaks and repair.

5. **Discharge line leakage**
- Soap cover on flex discharge line, if leakage noted replace line.
- Soap fittings to check leakage, tighten as needed.

IMPORTANT: The Complaints, Causes and Remedies presented here should not be considered as the only situations possible. They are only meant to represent the most commonly encountered. It may be necessary to perform additional trouble shooting using the more detailed information presented in service manuals for the specific components.

BW1811 © 2007 Bendix Commercial Vehicle Systems LLC All rights reserved. 5/2007 Printed in U.S.A.