KENWORTH A DIVISION OF PACCAR

Rtg - Datalog Harn

P95-1779 - 01

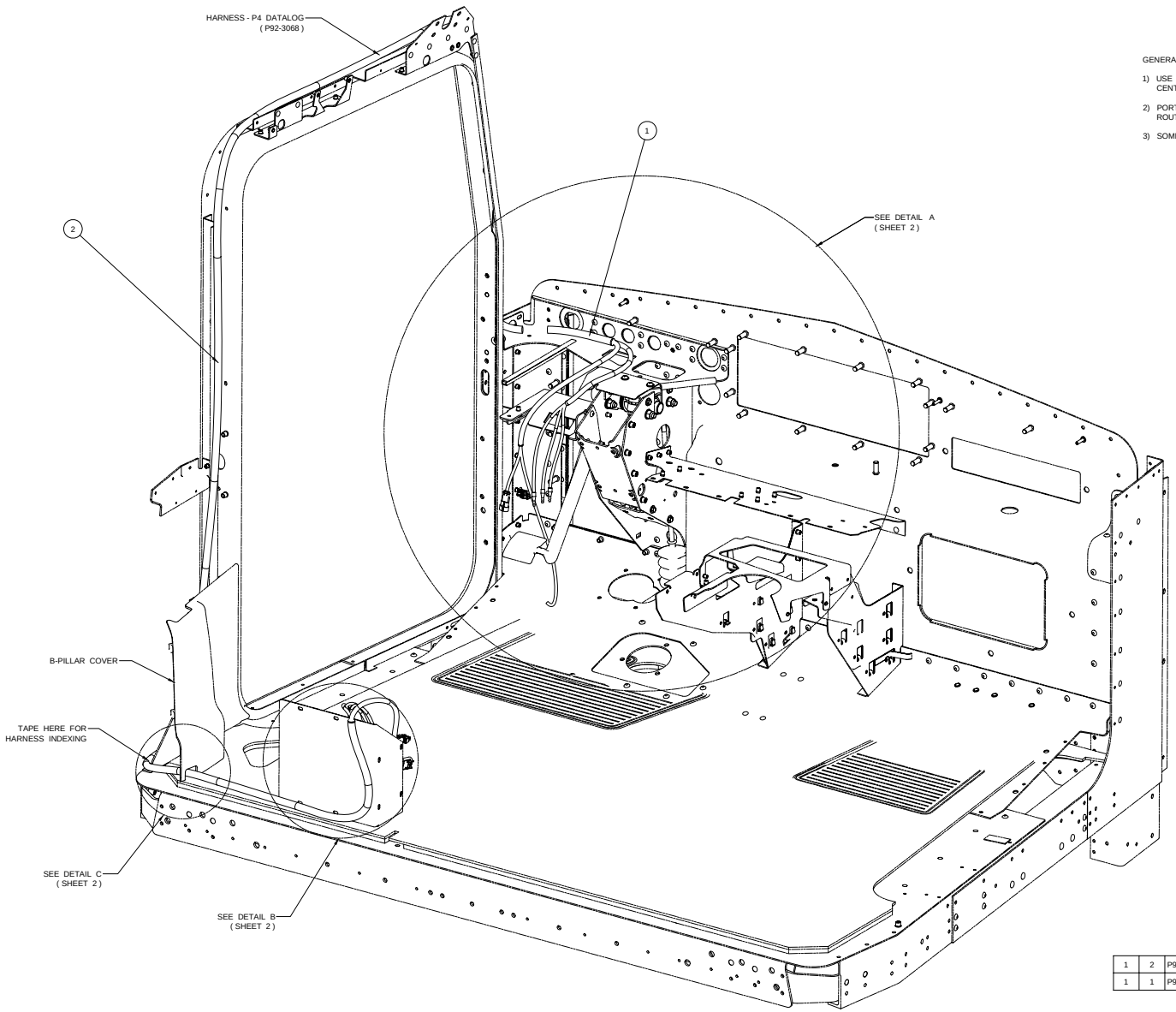

GENERAL NOTES:

1) USE ON T600, T800, W900 AND C500 CABS WITH PACCAR TECHNICAL CENTER DATA LOGGER. FOR FIELDTEST PURPOSE ONLY.

2) PORTIONS OF THE ROUTING NOT SPECIFICALLY DEFINED ARE TO BE ROUTED PER R026-198-77.

3) SOME COMPONENTS NOT SHOWN FOR CLARITY.

1	2	P92-3068	HARNESSS-DATALOG
1	1	P92-3127	HARNESS-DATALOG DASH

DWG SIZE A0

KENWORTH A DIVISION OF PACCAR

Rtg - Datalog Harn

P95-1779 - 02

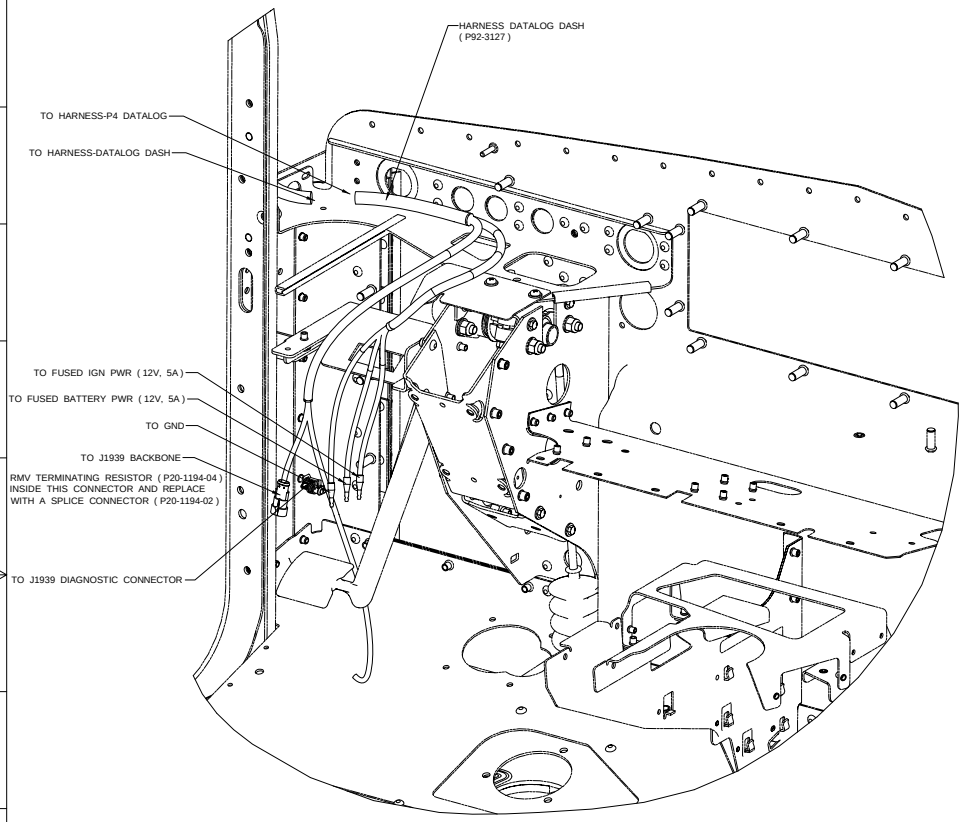

DETAIL A
SCALE 1:2

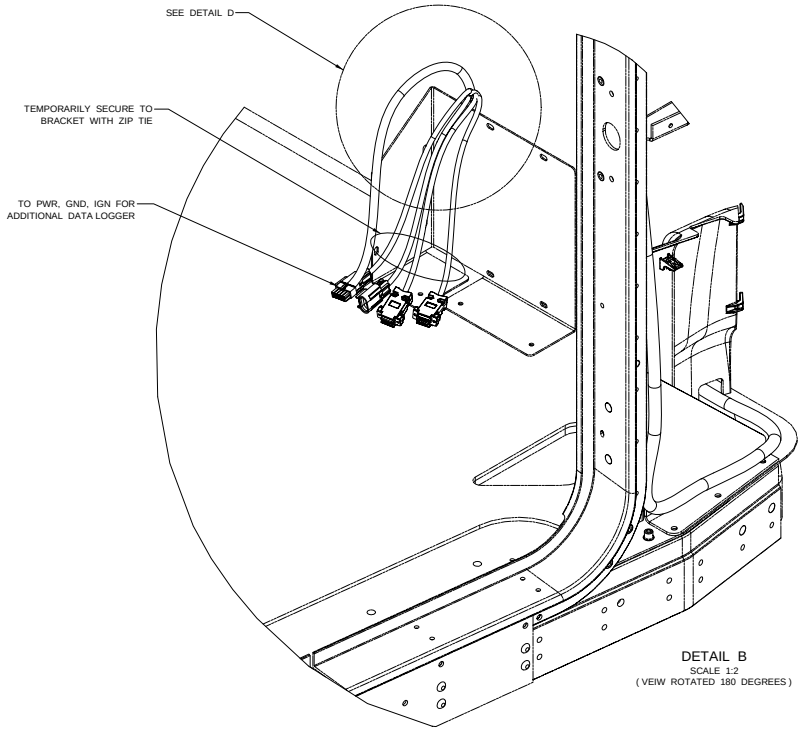

DETAIL B
SCALE 1:2
(VEIW ROTATED 180 DEGREES)

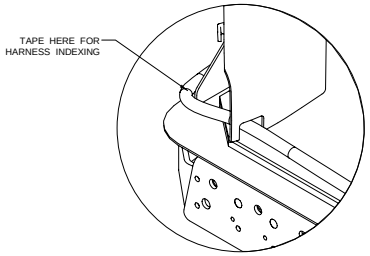

DETAIL C
SCALE 1:2
PLACE P4 DATALOG HARNESS
UNDER B-PILLAR COVER AS SHOWN

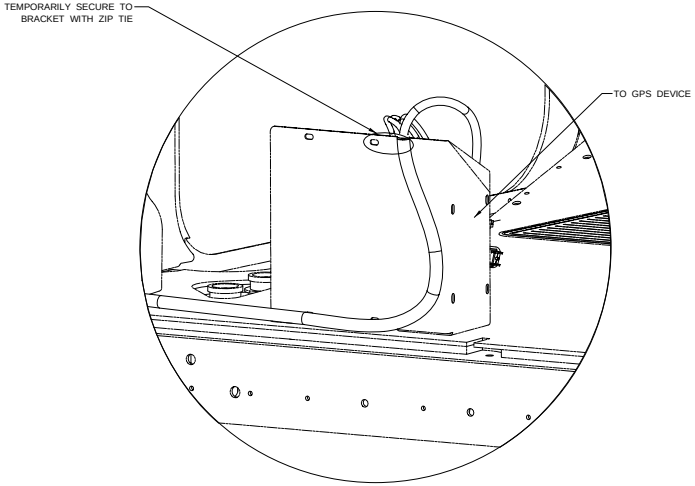

DETAIL D
SCALE 1:2
(VEIW ROTATED 180 DEGREES)

DWG SIZE A0