KENWORTH A DIVISION OF PACCAR Routing - T8B-ISX Fuel Hose V95-1067 - 01

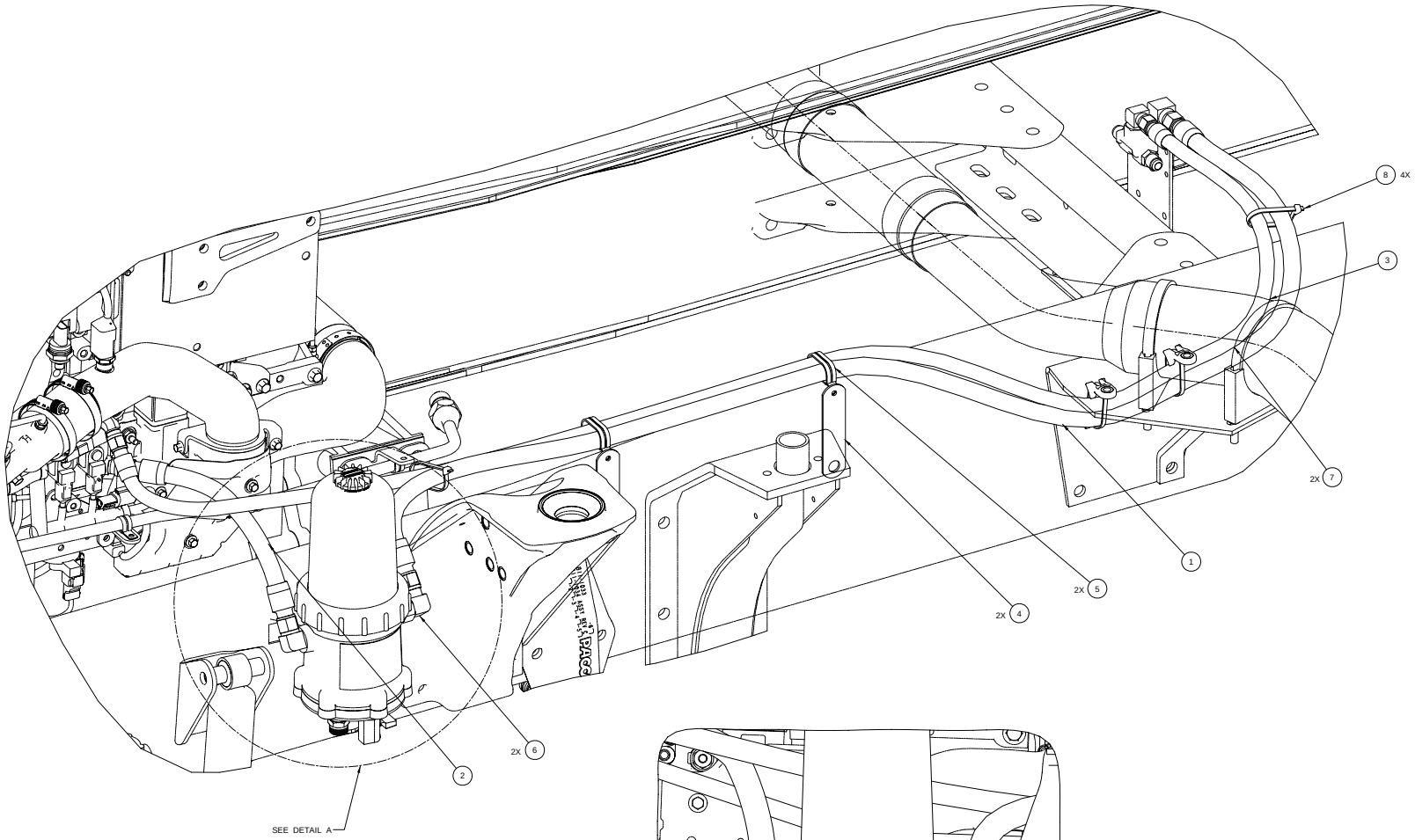

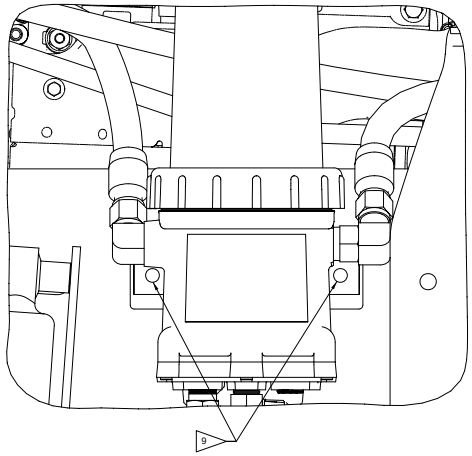

DETAIL A : FRAME DRILLING

NOTES:

1) FOR USE WITH T800B, T600 AND T800W WITH 2007 CUMMINS ISX ENGINE. (DUAL SOC EXHAUST SHOWN)

2) FOR USE WITH DAVCO 382 FUEL FILTER.

3) FOR SINGLE LH TANK ROUTE FUEL LINES ABOVE LH RAIL. FOR SINGLE RH TANK ROUTE FUEL LINES ABOVE LH RAL AND ACROSS BOC C / M.

4) SEE SHEET 1 FOR ROUTING W/O FUEL COOLER. SEE SHEET 2 FOR ROUTING W/ FUEL COOLER.

5) APPLY REFLEX WRAP HEAT SHIELD TO FUEL HOSES PER R414-1212 AND R026-198-98 SECTION 17.7.

6) COVER FUEL HOSES WITH CONVOLUTED TUBING PER R026-198-77 SECTION 4.3.

7) ASSEMBLY MAY SUBSTITUTE ZIP TIES OR SIMILAR DEVICE FOR CUSHION CLAMPS WHERE APPLICABLE.

8) ASSEMBLY MAY USE ADDITIONAL STANDOFFS AND CLAMPS AS NEEDED TO SECURE FUEL HOSES.

9 FRAME HOLE M10 (2 PLACES)
X = 1225; 1375
Y = 210
D = 11.2

4	8	Y84-6000-003	STRAP - TIE
2	7	MT1022305	MOUNT - ZIP'TIE
2	6	K129-186-0810	FTG-90 MALE, 1 / 2-14 X 7 / 8-14
2	5	DI6-6003-5422116	CLAMP - MULTI LOOP CUSHIONED
2	4	K028-2488-11	BRACKET - STANDOFF
1	3	V50-1006-108000	RETURN-HOSE-ASSY
1	2	V50-1006-110000	FILTER-TO-ENG-HOSE-ASSY
1	1	V50-1006-110000	SUPPLY-HOSE-ASSY

DWG SIZE A0

KENWORTH A DIVISION OF PACCAR Routing - T8B-ISX Fuel Hose V95-1067 - 02

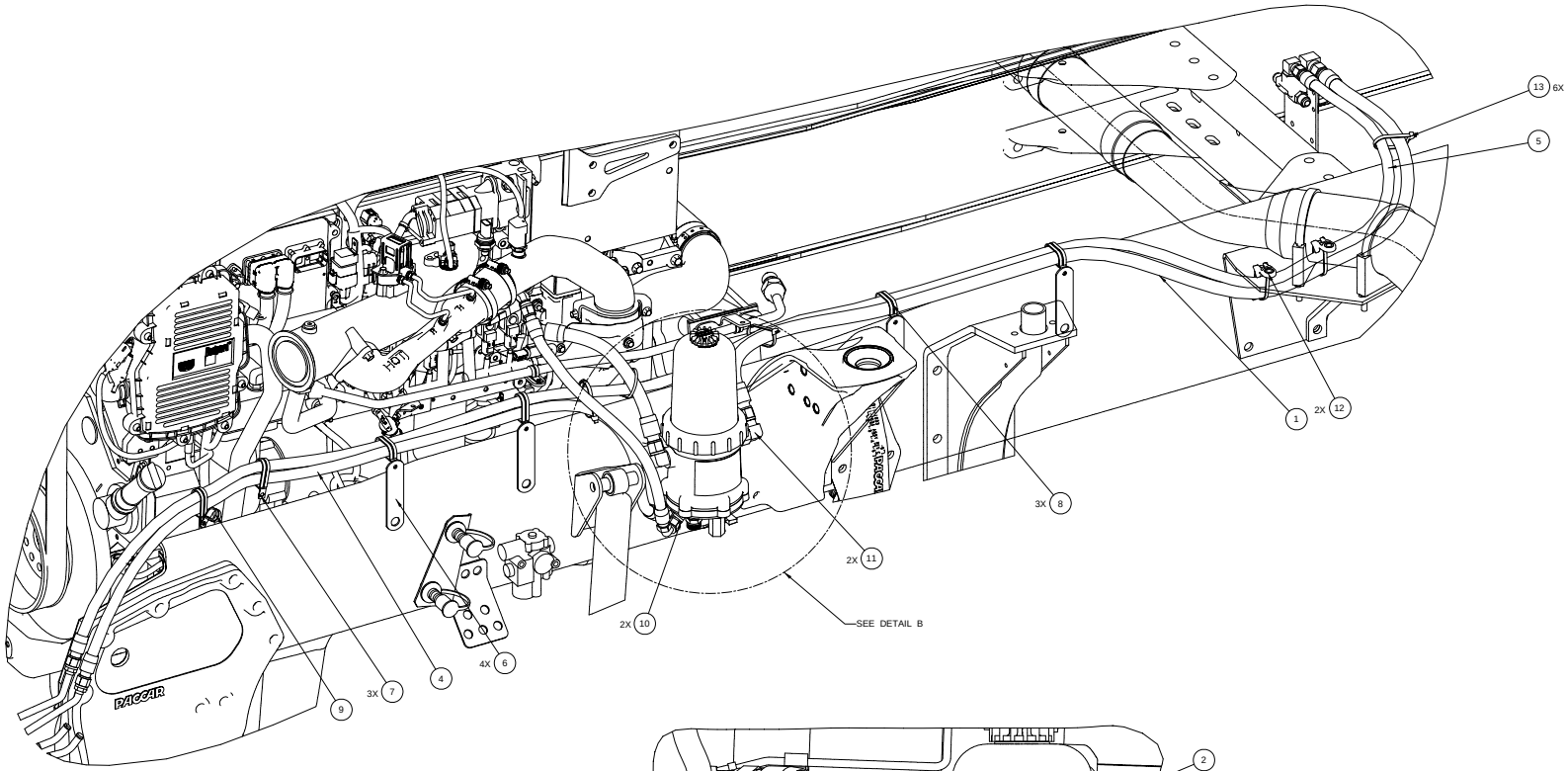

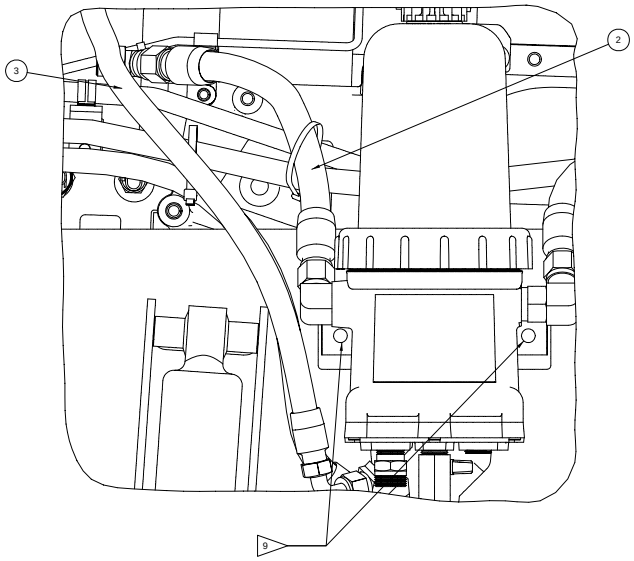

DETAIL B: FRAME DRILLING

NOTES:

1) FOR USE WITH T800B, T600 AND T800W WITH 2007 CUMMINS ISX ENGINE. (DUAL SOC EXHAUST SHOWN)

2) FOR USE WITH DAVCO 382 FUEL FILTER.

3) FOR SINGLE LH TANK ROUTE FUEL LINES ABOVE LH RAIL. FOR SINGLE RH TANK ROUTE FUEL LINES ABOVE LH RAL AND ACROSS BOC C / M.

4) SEE SHEET 1 FOR ROUTING W/O FUEL COOLER. SEE SHEET 2 FOR ROUTING W/ FUEL COOLER.

5) APPLY REFLEX WRAP HEAT SHIELD TO FUEL HOSES PER R414-1212 AND R026-198-98 SECTION 17.7.

6) COVER FUEL HOSES WITH CONVOLUTED TUBING PER R026-198-77 ECTION 4.3.

7) ASSEMBLY MAY SUBSTITUTE ZIP TIES OR SIMILAR DEVICE FOR CUSHION CLAMPS WHERE APPLICABLE.

8) ASSEMBLY MAY USE ADDITIONAL STANDOFFS AND CLAMPS AS NEEDED TO SECURE FUEL HOSES.

9 FRAME HOLE M10 (2 PLACES)
X = 1225, 1375
Y = 210
D = 11.2

6	13	Y84-6000-003	STRAP - TIE
2	12	MT1022305	MOUNT - ZIPTIE
2	11	K129-186-0810	FTG-90 MALE, 1 / 2-14 X 7 / 8-14
2	10	K129-188-0608	FTG-45 MALE, 3 / 8-18X3 / 4-16
1	9	D16-6003-5412112	CLAMP - CUSHIONED
3	8	DI6-6003-5422116	CLAMP-MULTI LOOP CUSHIONED
3	7	DI6-6003-5422116	CLAMP-MULTI LOOP CUSHIONED
4	6	K028-2488-11	BRACKET - STANDOFF
1	5	V50-1006-108000	RETURN-HOSE-ASSY
1	4	V50-1005-108000	FILTER-TO-COOLER-HOSE-ASSY
1	3	V50-1005-108000	ENG-TO-FILTER-HOSE-ASSY
1	2	V50-1006-110000	FILTER-TO-ENG-HOSE-ASSY
1	1	V50-1006-110000	SUPPLY-HOSE-ASSY

DWG SIZE A0