KENWORTH A DIVISION OF PACCAR

Routing - DPF, IND. Vertical

P95-1776 A 01

NOTES:

1) USE WITH NBI T800, T600, W900, C500 OR T300 MODELS WITH 2007 EMISSIONS ENGINES AND WITH SINGLE INDEPENDENT VERTICAL DPF.

2) USE SHEET 1 FOR T300 PX-6 / PX-8,
USE SHEET 2 FOR B-CAB CUMMINS,
USE SHEET 3 FOR B-CAB CAT.

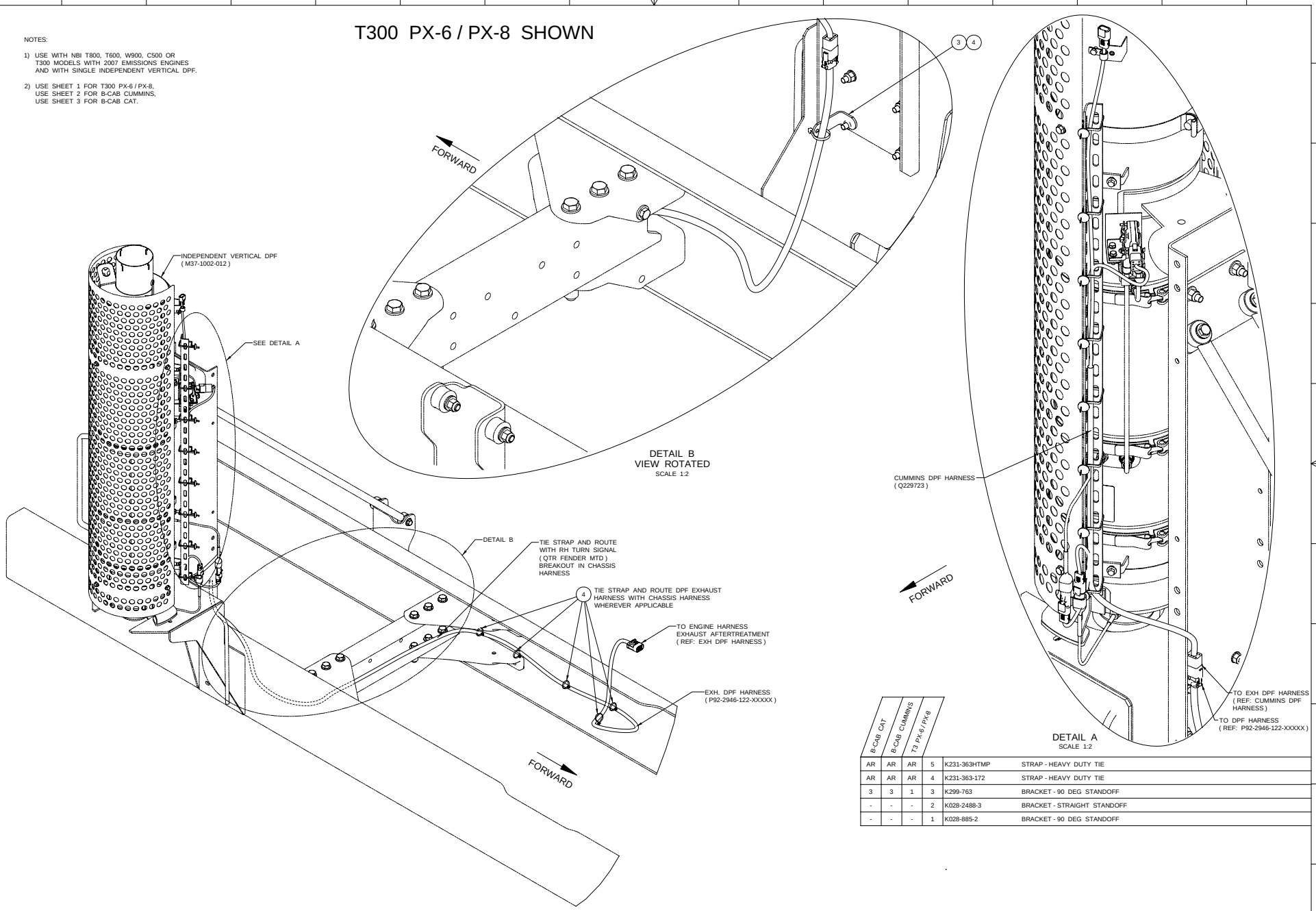

B-CAB CAT	B-CAB CUMMINS	T3 PX-6 / PX-8			
AR	AR	AR	5	K231-363HTMP	STRAP - HEAVY DUTY TIE
AR	AR	AR	4	K231-363-172	STRAP - HEAVY DUTY TIE
3	3	1	3	K299-763	BRACKET - 90 DEG STANDOFF
-	-	-	2	K028-2488-3	BRACKET - STRAIGHT STANDOFF
-	-	-	1	K028-885-2	BRACKET - 90 DEG STANDOFF

DWG SIZE A0

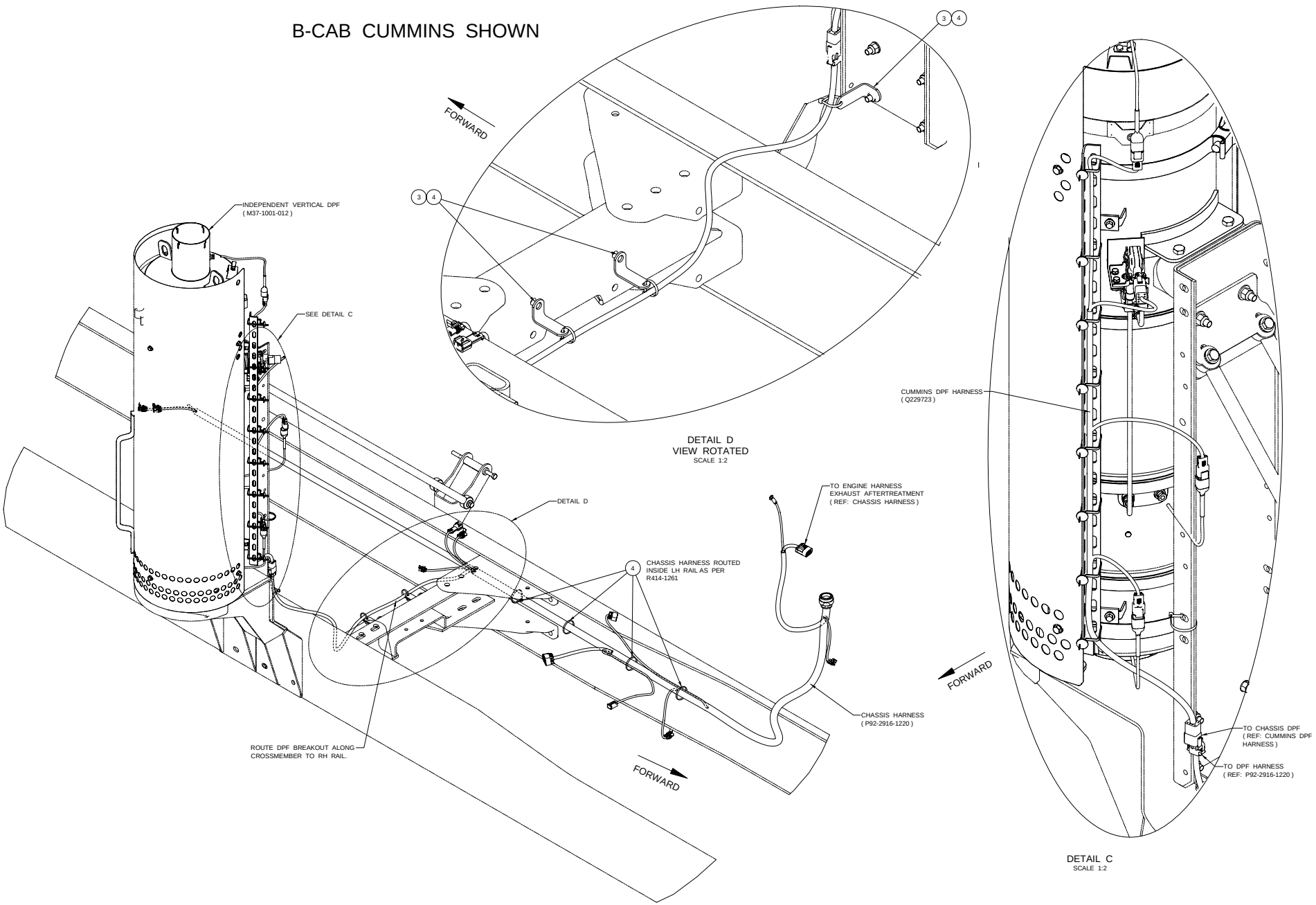
B-CAB CUMMINS SHOWN
INDEPENDENT VERTICAL DPF
(M37-1001-012)
SEE DETAIL C
DETAIL D
CHASSIS HARNESS ROUTED
INSIDE LH RAIL AS PER
R414-1261
ROUTE DPF BREAKOUT ALONG
CROSSMEMBER TO RH RAIL.
TO ENGINE HARNESS
EXHAUST AFTERTREATMENT
(REF: CHASSIS HARNESS)
CHASSIS HARNESS
(P92-2916-1220)
FORWARD
FORWARD
FORWARD
DETAIL D
VIEW ROTATED
SCALE 1:2
CUMMINS DPF HARNESS
(Q229723)
TO CHASSIS DPF
(REF: CUMMINS DPF
HARNESS)
TO DPF HARNESS
(REF: P92-2916-1220)
DETAIL C
SCALE 1:2
DWG SIZE A0

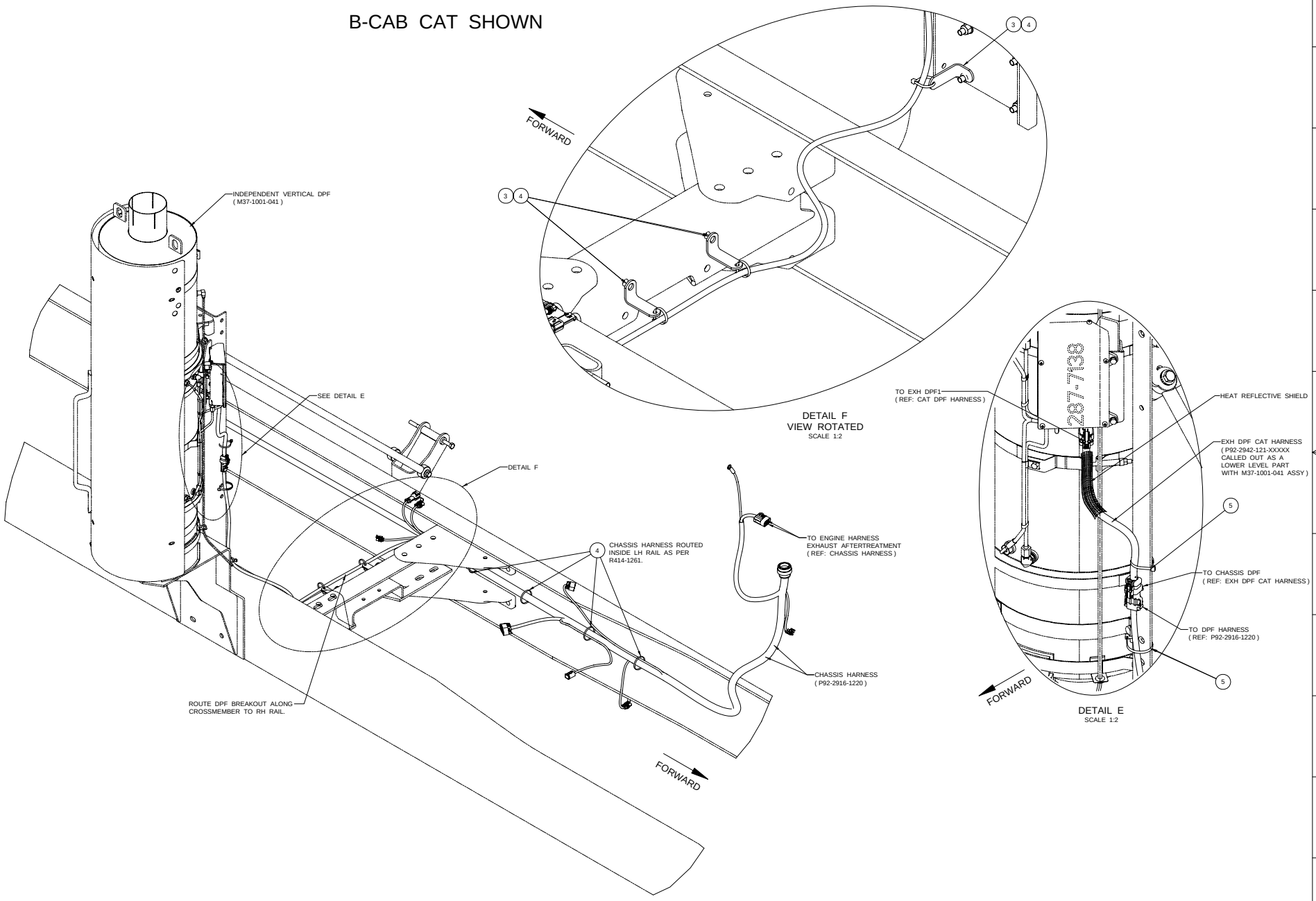
B-CAB CAT SHOWN
INDEPENDENT VERTICAL DPF
(M37-1001-041)
SEE DETAIL E
DETAIL F
CHASSIS HARNESS ROUTED INSIDE LH RAIL AS PER R414-1261.
ROUTE DPF BREAKOUT ALONG CROSSMEMBER TO RH RAIL.
TO ENGINE HARNESS EXHAUST AFTERTREATMENT (REF: CHASSIS HARNESS)
CHASSIS HARNESS (P92-2916-1220)
FORWARD
DETAIL F
VIEW ROTATED
SCALE 1:2
TO EXH DPF1 (REF: CAT DPF HARNESS)
HEAT REFLECTIVE SHIELD
EXH DPF CAT HARNESS (P92-2942-121-XXXXX CALLED OUT AS A LOWER LEVEL PART WITH M37-1001-041 ASSY)
TO CHASSIS DPF (REF: EXH DPF CAT HARNESS)
TO DPF HARNESS (REF: P92-2916-1220)
DETAIL E
SCALE 1:2