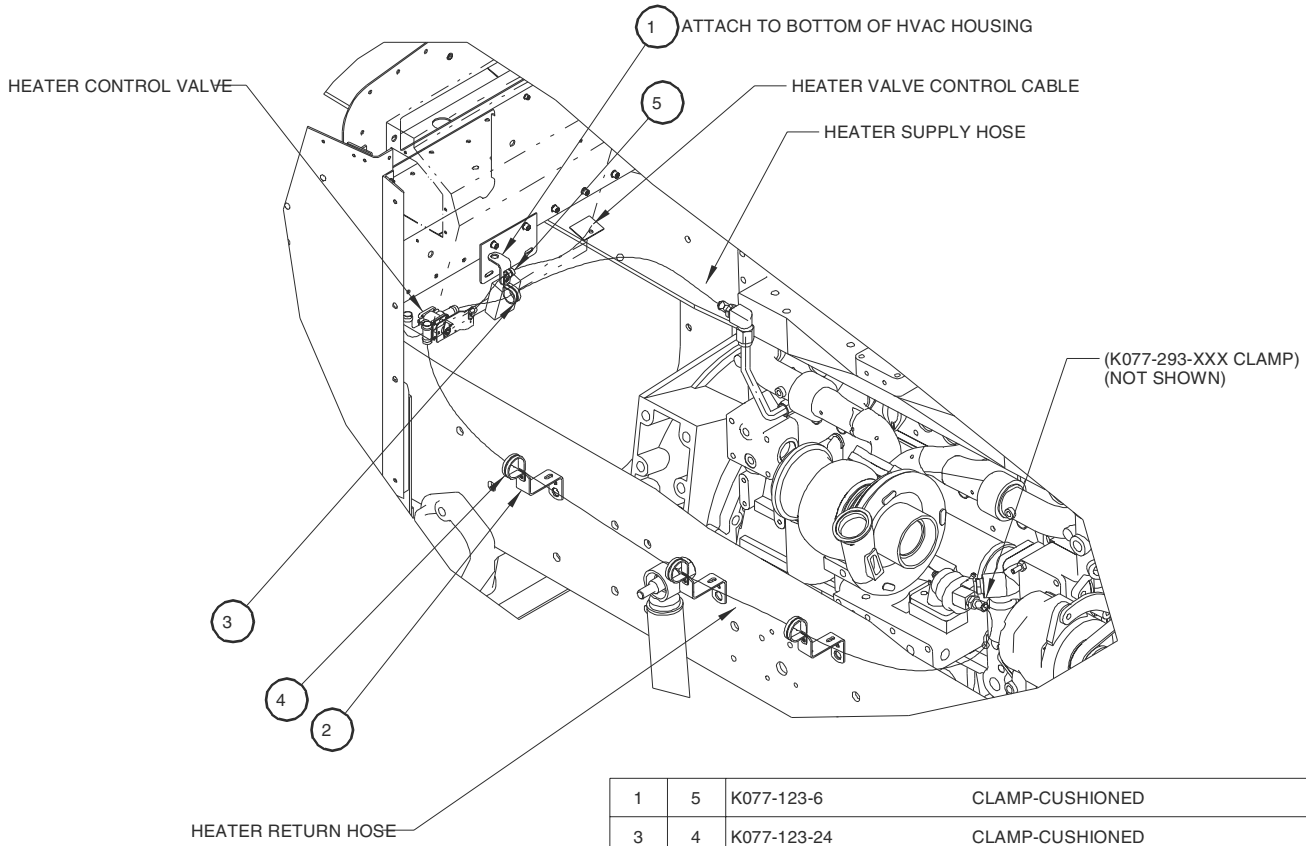


| QTY | ITEM | PART NUMBER | PRODUCT DESCRIPTION | MATERIAL |
|---|---|---|---|---|
| 1 | 5 | K077-123-6 | CLAMP-CUSHIONED | |
| 3 | 4 | K077-123-24 | CLAMP-CUSHIONED | |
| 1 | 3 | K077-123-16 | CLAMP-CUSHIONED | |
| 3 | 2 | K299-420 | BRACKET - STANDOFF | |
| 1 | 1 | K028-885-2 | ANCHOR-SPRING CLUTCH RETURN | |

NOTES:
1) USE WITH CUMMINS ISM SERIES ENGINES.
2) SECURE ALL HOSE ENDS TO FITTINGS USING K077-293-XXX CLAMP.
3) CONTAINMENT AND SECURING OF ALL CAB AND CHASSIS ROUTINGS SHALL BE IN COMPLIANCE WITH R026-198-77.
4) SEE R125-41 FOR WATER PORT IDENTIFICATION.

Heater Hose, ISM, T600, T800
R414-1193
Sheet 1 of 1