DT 466E and INTERNATIONAL 530E

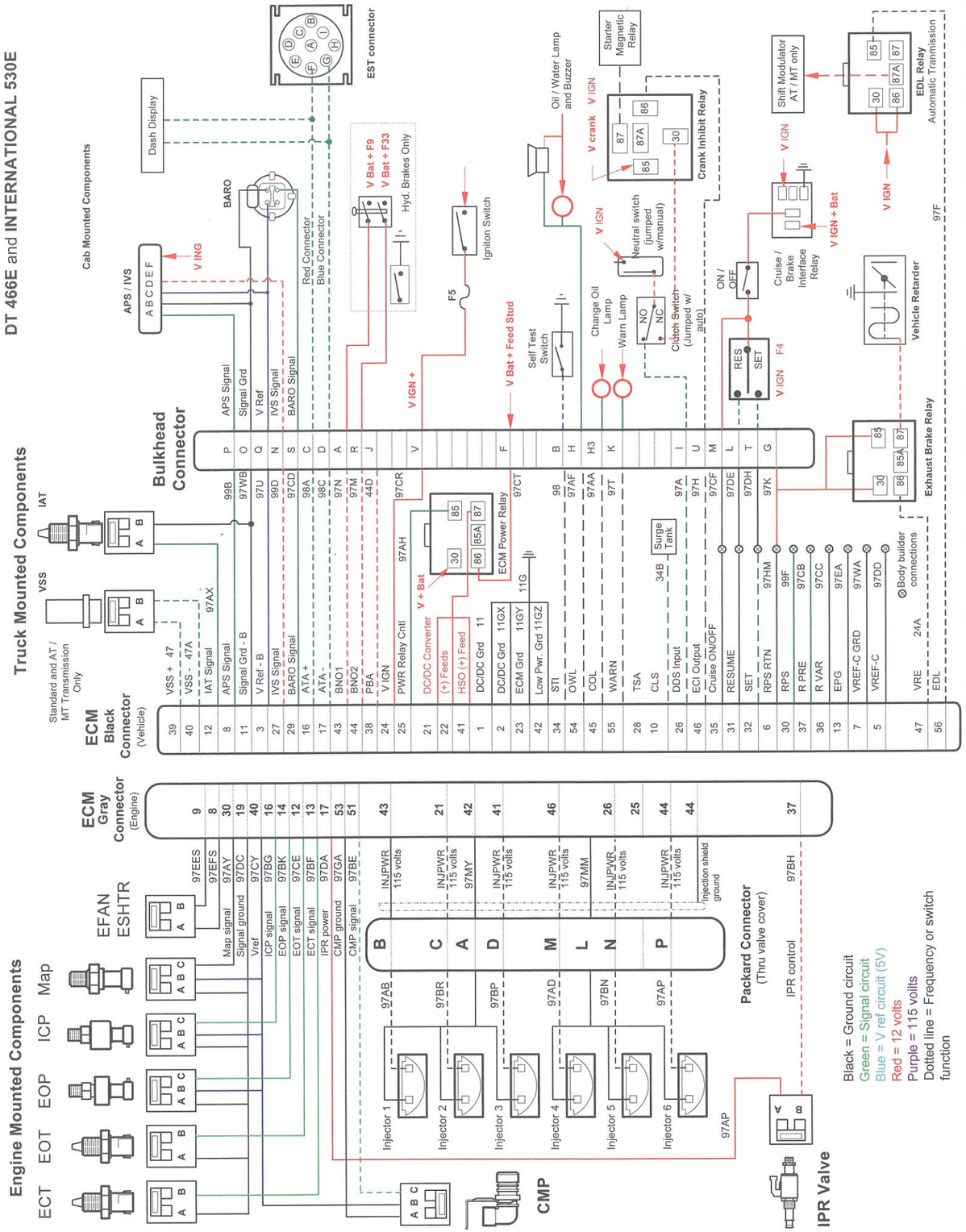

SIGNAL VALUES for DT466E and INTERNATIONAL 530E (All values with breakout box installed on ECM and harness)

Pin	Item	Circuit	Circuit No.	Key ON	Low Idle Signal	Low Idle Data List	High Idle Signal	High Idle Data List	Operating Range	Comments
ECM CONNECTOR (GREY)										
8	EFN	Fan	97EFS						0v Solenoid ON, fan OFF 12v /	Open: solenoid OFF, fan ON
9	ESHTR	Shutters	97EES							
12	EOT	Engine Oil Temperature	97CE	Temperature Dependent					1.9v = 194°F	4.75v = – 40°F .669v = 230°F
13	ECT	Engine Coolant Temperature	97BF	Temperature Dependent					.65v = 199°F	4.53v = – 40°F .356v = 230°F
14	EOP	Engine Oil Pressure	97BK	.61v	2.6v	39 psi	3.60v	60 psi	.5v – 4.64v	.5v = 0 psi 4.64v = 80 psi
16	ICP	Injection Control pressure sensor	97BG	.2v	.48v	431 psi	1.97v	1370 psi	.3v – 4.5v	.84v = 444 psi 3.64v = 3000 psi
17	IPR	Injection Pressure Regulator	97DA	B+	B+	–	B+	–	B+	Power supply for IPR valve
19	Sig_Grd D	Signal Ground D	97DC	0v	0v	–	0v	–	0V	Ground for engine sensors
21	INJ_2	Injector 2	97BR	**Do not measure Voltage**						High voltage pulse with signal
24	INJ_SHD	Injector Shield Ground								
25	INJ_5	Injector 5	97BN	**Do not measure Voltage**						High voltage pulse with signal
26	INJ_GRD	Injector Grounds	97MM	**Do not measure Voltage**						Bank 1 injector grounds to ECM
30	MAP	Manifold Absolute Pressure 4,5, and 6)	97AY	.88v	.96v	.5 psi	1.36v	3.75 psi	.85v – 4.56v	.88v = 0 psi 4.13v = 32 psi
37	IPR_CNTR	Injection Pressure Regulator control	97BH	0v	0v	–	0v	–	0v	Duty Cycle Duty Controlled
40	VREF_D	Voltage Reference D	97CY	5 ± 5v	5 ± 5v	–	5 ± 5v	–	5 ± 5v	V– Ref for engine sensors
41	INJ_3	Injector 3	97BP	**Do not measure Voltage**						High voltage pulse with signal
42	ING_GRD	Injector Power (1, 2, and 3)	97MY	**Do not measure Voltage**						Bank 2 injector grounds to ECM
43	INJ_1	Injector 1	97AB	**Do not measure Voltage**						High voltage pulse with signal
44	INJ_6	Injector 6	97AP	**Do not measure Voltage**						High voltage pulse with signal
46	INJ_4	Injector 4	97AD	**Do not measure Voltage**						High voltage pulse with signal
51	CMP	Camshaft position sensor	97BE	5v / 1v	2.11v	–	2.44v	–	140 – 600 HZ	700 – 3000 RPM Hz varies with RPM
53	CMP Grd	Camshaft sensor ground	97GA	0v	0v	–	0v	–	0v	CMP sensor ground
CHASSIS CONNECTOR (BLACK)										
1	DC / DC	Pwr Ground for injector drivers	11GW	0v	0v	–	0v	–	0v	
2	DC / DC	Pwr Ground for injector drivers	11GX	0v	0v	–	0v	–	0v	
3	VREF_B	Voltage Reference B	97U	5 ± 5v	5 ± 5v	–	5 ± 5v	–	5 ± 5v	V - Ref for cab mounted sensors
4	HGE	Hydraulic Governor	97HE						0v	Input for HYD pressure governor
5	VREF_C	Voltage Reference C	97DD	5 ± 5v	5 ± 5v	–	5 ± 5v	–	5 ± 5v	V - Ref for body builder sensors
6	RPS_GRD	Remote pedal sensor ground	97HM	0v	0v	–	0v	–	0v	Remote accelerat or pedal sensor ground
7	Sig_Grd C	Signal ground C	97WA	0v	0v	–	0v	–		Signal ground for body builder sensors
8	APS	Accelerator Pedal Sensor	99B	.47v	.47v	0%	3.74v	102%	.47v - 3.74v	APS signal (min 3.65v required for 102%
10	CLS	Coolant Level Switch	34B	Dependent on Coolant Level					0v / 5v	0v = Low Coolant. 5v = Full Coolant.
11	Sig_Grd B	Signal ground B	97BW	0v	0v	–	0v	–	0v	Signal ground cab mounted sensors
12	IAT	Air Intake Temperature	97AX	Temperature Dependent					3v = 68°F	3.87v = 32°F 2.29v = 99°F
13	EPG	Electronic Pressure Gov. Sensor	97EA							.49v = 10 psi 4.88v = 510 psi
16	ATA (+)	Communication Link (Red)	98A	Digital data signal (No signal no EST data display)						Dash / Diagnostic / Programming
17	ATA (-)	Communication Link (Blue)	98C	Digital data signal (No signal no EST data display)						Dash / Diagnostic / Programming
21	DC / DC	Pwr Supply for injector drivers	97CL	B+	B+	B+	B+	B+	B+	Power from ECM power relay
22	DC / DC	Pwr Supply for injector drivers	97CK	B+	B+	B+	B+	B+	B+	Power from ECM power relay
23	ECM_GRD	ECM Ground	11GY	0v	0v	–	0v		0v	
24	VIGN (+)	ECM Ignition Voltage	97CR	B+	B+	B+	B+	B+	B+	Power from ignition circuit
25	ECM_CNT	ECM Power relay control	97AH	1.5v	1.5v	–	1.5v	–	B+ / 1.5v	1.5v = ECM relay ON. B+ = ECM relay ON.
26	DDS	Driveline Disengagement	97A	0V = Clutch pedal down.			12v = Clutch pedal up.		0V = Trans in gear.	12v = Trans in neutral.
27	IVS	Idle Invalidation Switch	99D	0v / 12v	0v	–	12v	–	0v / 12v	0v = APS at idle. 12v = APS off idle.
28	TSA	Two Speed Axle Switch	93A	0V = High axle range. 12v = Low axle range.						
29	BAP	Barometric Pressure Sensor	97CD	4.6v	4.6v	14.7 psi	4.6v	14.7 psi	2.55v – 4.8v	4.6 = Sea level. 2.6v = 10,000 ft (approx.)
30	RPS	Remote Pedal Sensor	99F	–	–	0%	–	102%	.47V – 3.74V	RPM signal (min 3.799V reqd. for 102%
31	RAS	Resume / Accelerate Switch	97DK	0v = Switch normal.	12V = Switch depressed (accel or resume)					Note: Signal only when COO is ON.
32	SET	Cruise Set Switch	97DJ	0v = Switch normal.	12V = Switch depressed (cruise / PTO set)					Note: Signal only when COO is ON.
34	STI	Self Test Input	98	4.7v	4.7V	–	4.7v	–	4.5v – 5.02v	Diagnostic button ground circuit.
35	COO	Cruise ON / OFF Switch	97CF	12v/0v	12v/0v	On/Off	12v/0v	On/Off	12v/0v	0v = Cruise/PTO Off. 12v = Cruise/PTO On.
36	RVAR	Remote Variable PTO	97CC	12v= PTO On.		0v = PTO Off.				Remote variable PTO On/Off
37	RPRE	Remote Preset PTO	97CB	12v = PTO On.		0v = PTO Off.				Remote Preset PTO OnN/Off
38	PBA	Parking Brake Applied Switch	44D							
*39	VSS	Vehicle Speed Input	47	Digital signal from WTEC module transmission						*Allison World Class transmission only.
39	VSS (+)	Vehicle Speed Sensor (+)	47	2.25v	2v 14vac	MPH	2v 14vac	MPH	2v 14vac	Manual and mechanical transmissions
40	VSS (-)	Vehicle Speed Sensor (-)	47A	2.25v	2v 14vac	MPH	2v 14vac	MPH	2v 14vac	VSS signal is an AC sine wave
41	ECM_PWR	Voltage from ECM_PWR relay	97AL	B+	B+	B+	B+	B+	B+	Power from ECM power relay
42	ECM_GRD	ECM Ground	11GZ	0v	0v	–	0v	–	0v	
43	BNO_1	Brake Switch 1	97N	12v/0v	12v/0v	Off/On	12v/0v	Off/On	12v/0v	0v = Break released. 12v = Brake depressed.
44	BNO_2	Brake Switch 2	97M	12v/0v	12v/0v	Off/On	12v/0v	Off/On	12v/0v	0v = Break released. 12v = Brake depressed.
45	COL	Change Oil Lamp	97AA	12v/ .6v	12v/ .6v	–	12v/.6v		12v/.6v	12v = Lamp Off. 6v = Lamp On.
46	ECI	Engine Crank Inhibit Relay	97H	0v	12v	–	12v	–	0v/12v	0v = Allow crank. .6v = Inhibits crank.
47	VRE	Vehicle Retarder Output	24A							
54	OWL	Oil / Coolant Warning lamp	97AF	12v/ .6v	12v/ .6v	–	12v/.6v		12v/.6v	12v = Lamp Off. .6v = Lamp On
55	WARN	Oil / Coolant Warning lamp	97T	12v/ .6v	12v/ .6v	–	12v/.6v		12v/.6v	12v = Lamp Off. .6v = Lamp On
56	EDL	Engine Data Line	92F	0v = Normal shift. 12v = Elevated shift schedule.						Automatic transmission relay
57	VSSCALB	Vehicle Speed Output	47D	Digital frequency 0v–12v signal (for remote speedometer only)						Varies with vehicle speed
60	TACB	Tachometer Output	97AP	Digital frequency 0v–12v signal (for remote TACH only)						Varies with engine RPM. Hz = (RPM/5)

 ©INTERNATIONAL TRUCK AND ENGINE CORPORATION