Model:BL088HD00027 Serial number: BL088HD00027 1602021

Chapter 1602021 Spirit level

1602021 - 1602021 Spirit level

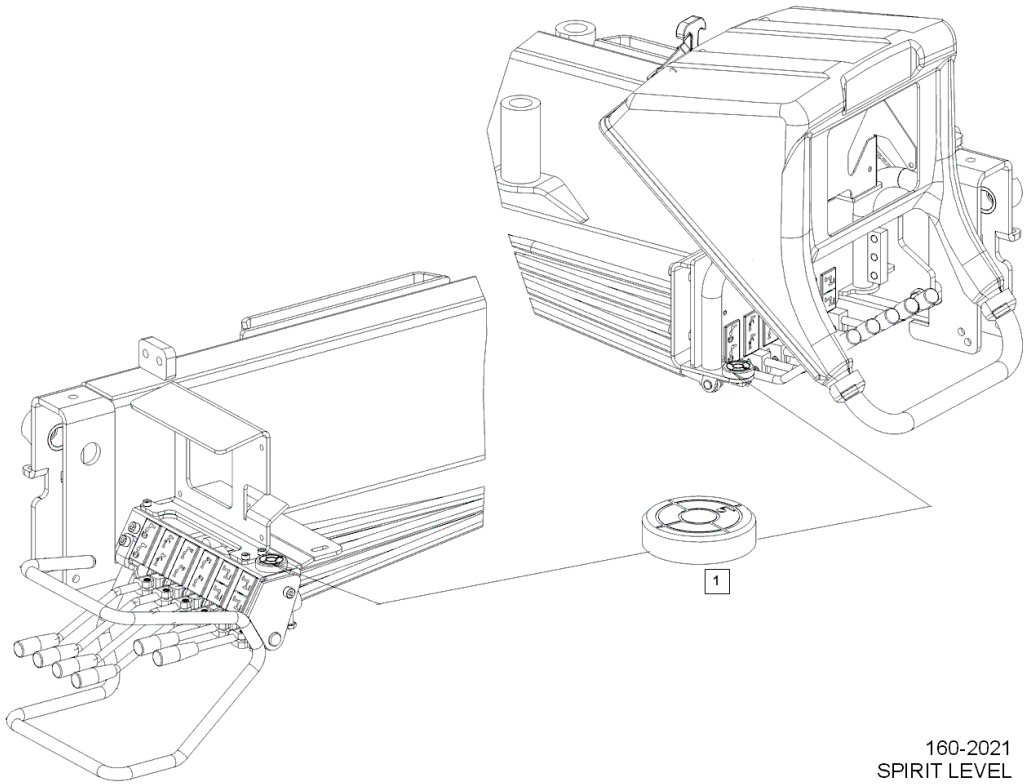

Pos	Part No	Description	Quantity
1	9852468	SPIRIT LEVEL	1

Model:BL088HD00027 Serial number: BL088HD00027 1800655

Chapter 1800655 Ext. L-2.3 (short) cpl. without hook support

1800655 - 1800655 Ext. L-2.3 (short) cpl. without hook support

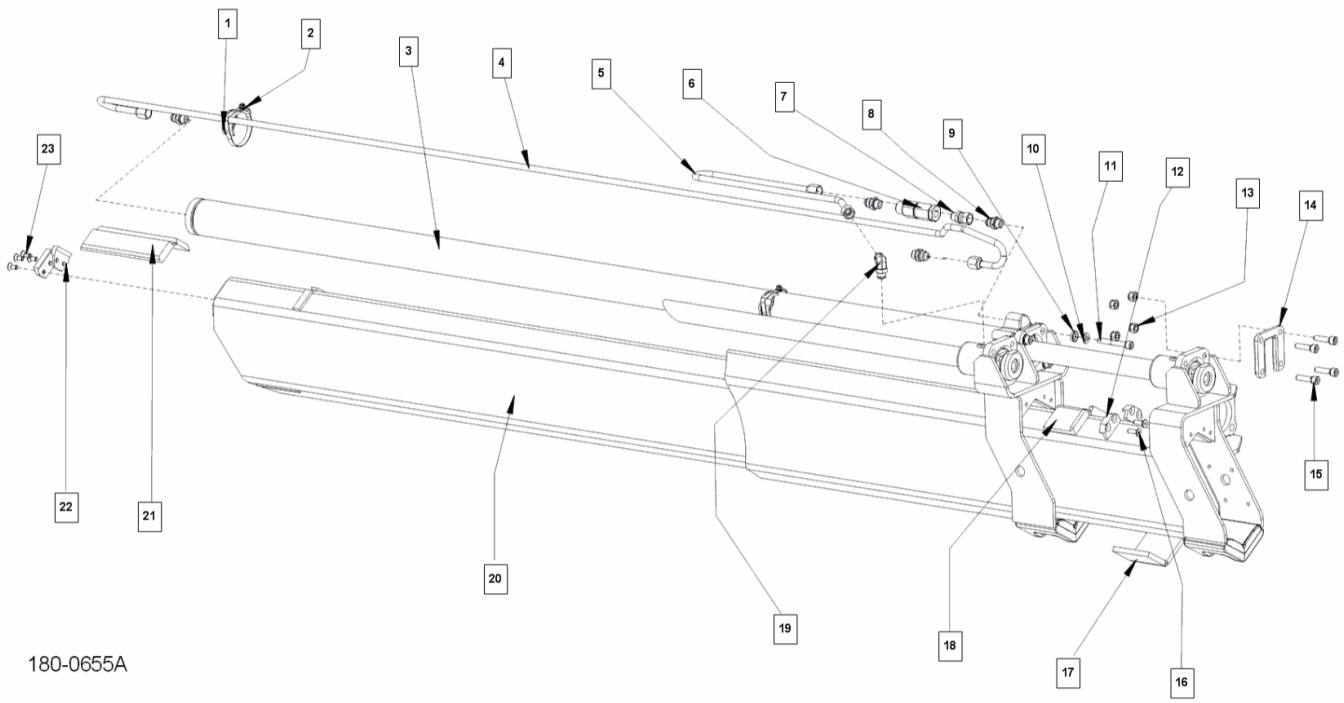

Pos	Part No	Description	Quantity
1	3506495	SUPPORT	2
2	9917799	HOSE CLAMP	2
3	4971442	CYLINDER 63/40-1850	1
4	4971981	HYDRAULIC PIPE	1
5	4971973	HYDRAULIC PIPE	1
6	8173427	SEQUENCE VALVE	1
7	9822151	COUPLING	1
8	9819223	COUPLING	4
9	3661679	WASHER	4
10	9836012	WASHER	4
11	9922571	SCREW	4
12	3626024	STOP	2
13	9964347	LOCKING NUT	4
14	4962877	LOCKING PLATE	1
15	9922521	CH SCREW M10 x 40	4
16	9973371	SCREW	4
17	8166269	SLIDE PAD	1
18	4971990	SLIDE PAD	1
19	9819291	ANGLE COUPLING	1
20	4977271	EXTENSION BOOM	1
21	3634680	SLIDE PAD	1
22	3634701	STOP	2
23	9955526	SCREW	4

Model:BL088HD00027 Serial number: BL088HD00027 1801147

Chapter 1801147 Extension 1 pipe kit, short boom

1801147 - 1801147 Extension 1 pipe kit, short boom

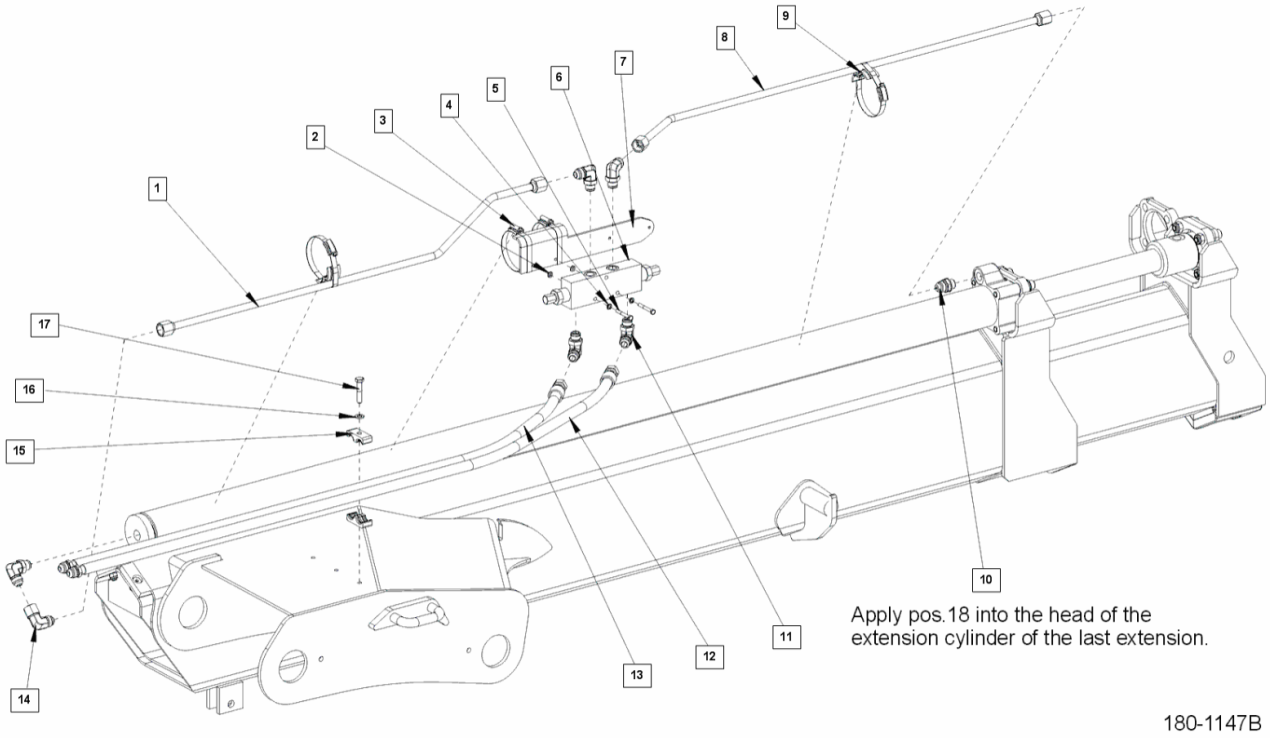

Pos	Part No	Description	Quantity
1	1801155	HYDRAULIC PIPE	1
2	9908242	WASHER	2
3	9917799	HOSE CLAMP	4
4	9904107	SPRING WASHER	2
5	9923781	BOLT M5 x 40	2
6	9853791	DOUBLE LOAD HOLDING VALV	1
7	4984374	PLATE	1
8	1805517	HYDRAULIC PIPE	1
9	3506495	SUPPORT	2
10	9819223	COUPLING	1
11	9819291	ANGLE COUPLING	5
12	9825827	HP HOSE	1
13	9847316	HP. HOSE	1
14	9819975	ANGLE COUPLING	1
15	3197336	HOSE CLAMP	2
16	9903861	WASHER	1
17	9924078	SCREW	1
18	9994424	PLUG	2

Model:BL088HD00027 Serial number: BL088HD00027 1801163

Chapter 1801163 Catch for short boom

1801163 - 1801163 Catch for short boom

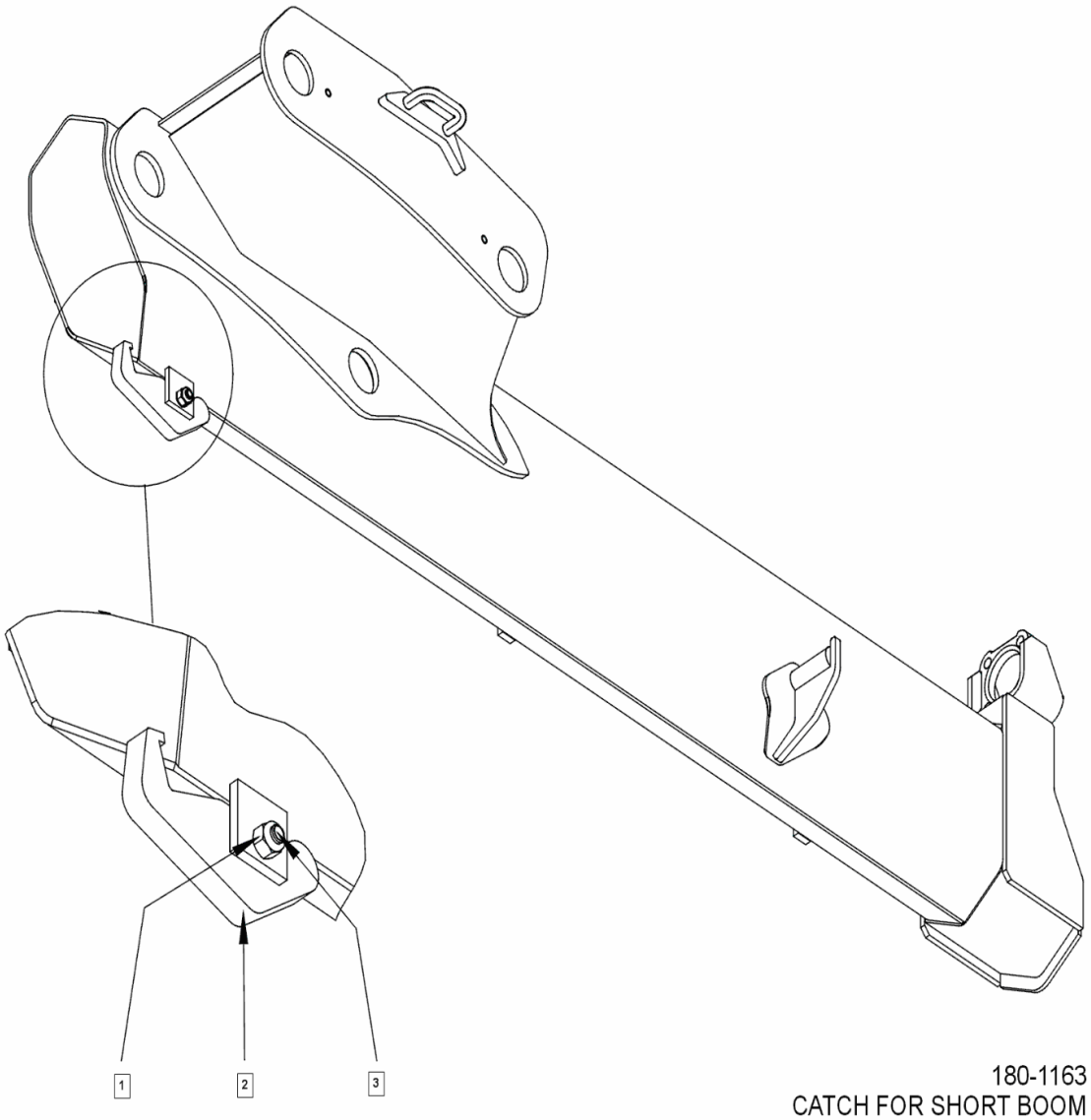

Pos	Part No	Description	Quantity
1	9953523	LOCKING NUT	1
2	3493016	HOOK	1
3	9924370	SCREW	1

Model:BL088HD00027 Serial number: BL088HD00027 1803751

Chapter 1803751 Filterset SPACE 4000

1803751 - 1803751 Filterset SPACE 4000

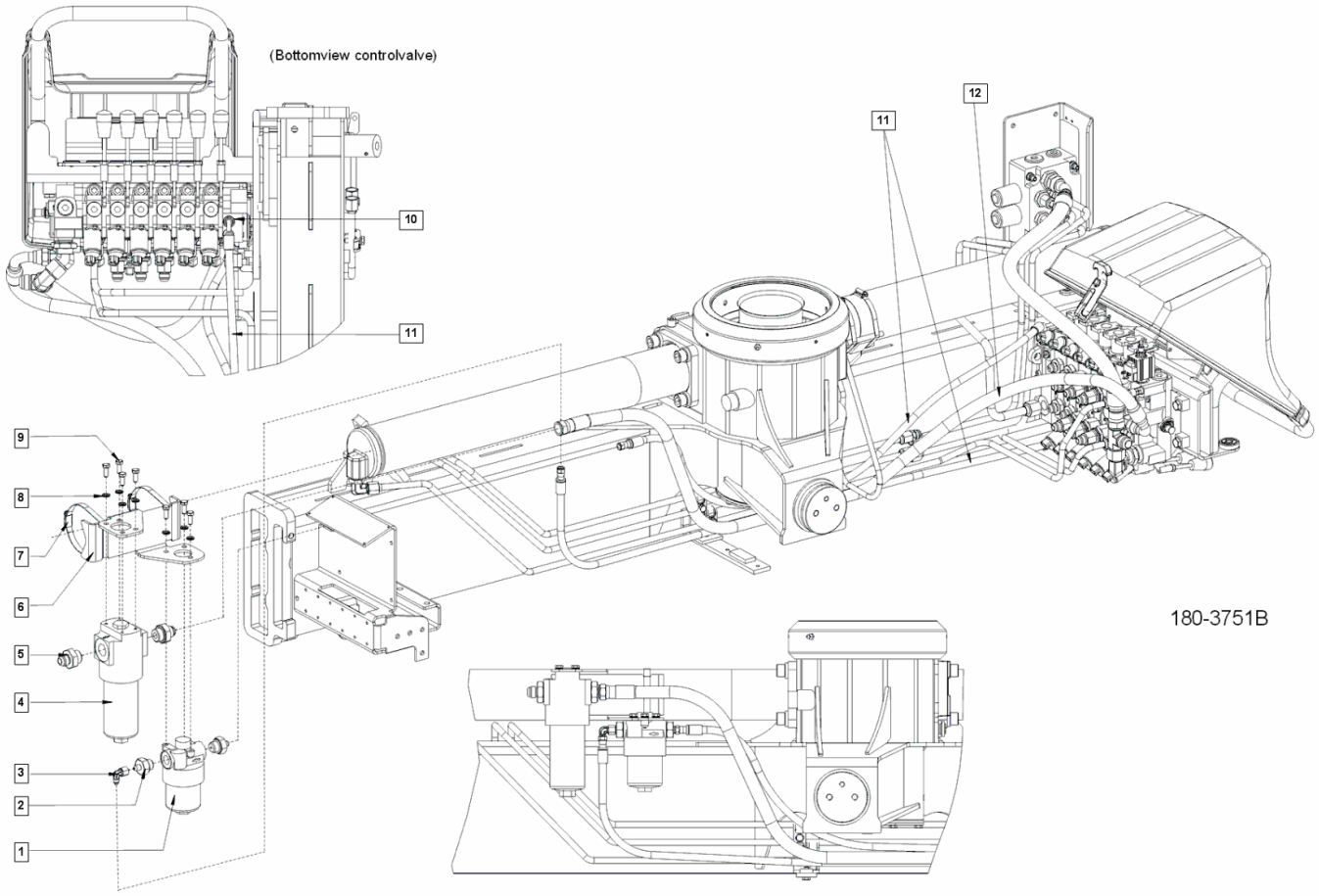

Pos	Part No	Description	Quantity
1	9859942	FILTER	1
2	9821341	COUPLING	2
3	9821741	ANGLE COUPLING	1
4	9868771	FILTER	1
5	9814507	NIPPLE	2
6	1983377	SUPPORT	1
7	9937587	HOSE CLAMP 104-138	2
8	9904131	SPRING WASHER	7
9	9924051	SCREW	7
10	9808213	COUPLING	2
11	9833811	HP-HOSE	2
12	9870105	HP HOSE	1

Model:BL088HD00027

Serial number: BL088HD00027

1804260

Chapter

1804260 Hook support

1804260 - 1804260 Hook support

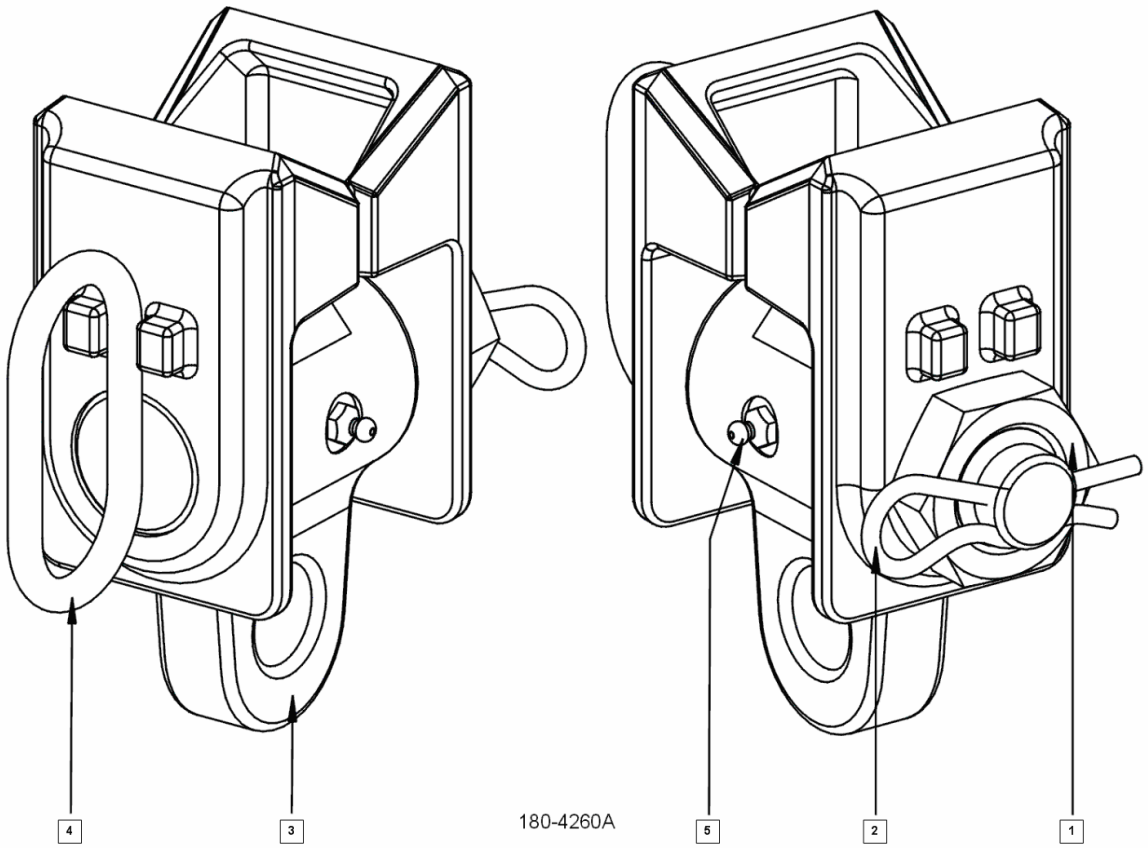

Pos	Part No	Description	Quantity
1	8563870	NUT	1
2	9975501	LOCKING PIN	1
3	3516571	ATTACHMENT	1
4	4984480	QUICK RELEASE PIN	1
5	9906185	GREASE NIPPLE	1

Model:BL088HD00027 Serial number: BL088HD00027 1811801

Chapter 1811801 3-point bridge assembly

1811801 - 1811801 3-point bridge assembly

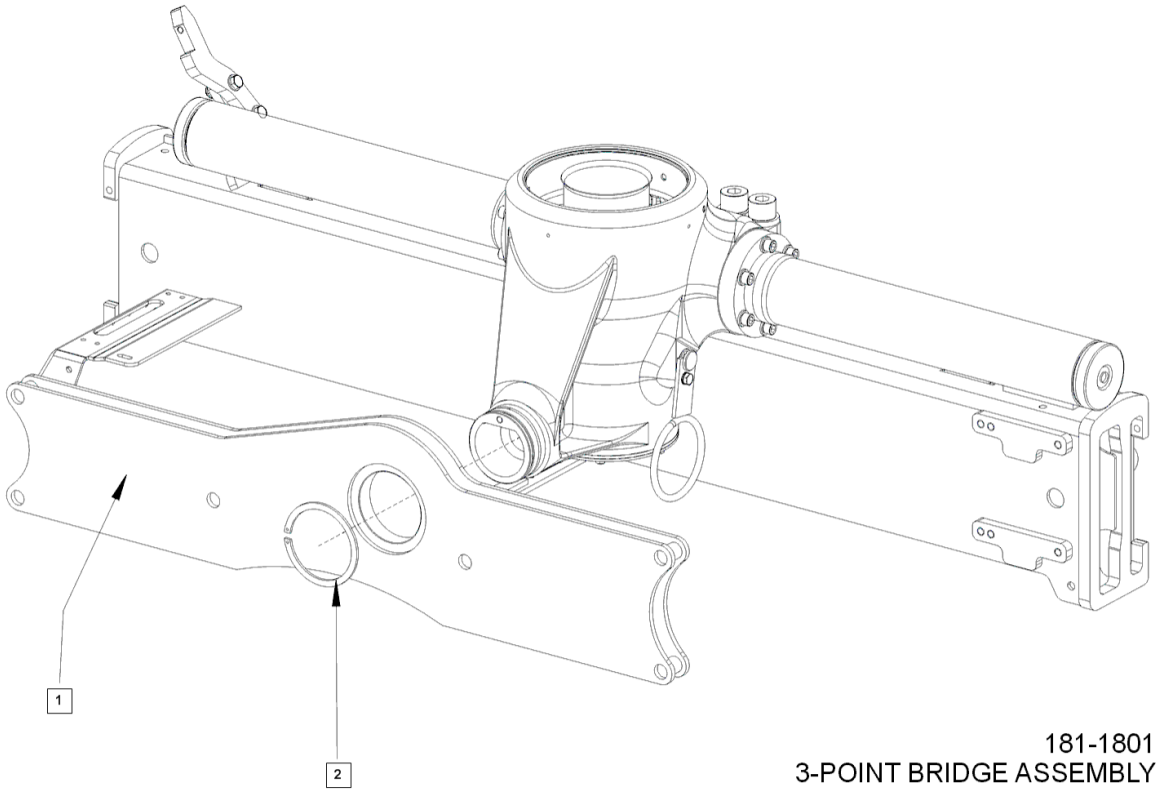

181-1801
3-POINT BRIDGE ASSEMBLY

Pos	Part No	Description	Quantity
1	1805991	THREE POINT BRIDGE	1
2	9928880	RETAINING RING	1

Model:BL088HD00027 Serial number: BL088HD00027 1812416

Chapter 1812416 Lifting eyes

1812416 - 1812416 Lifting eyes

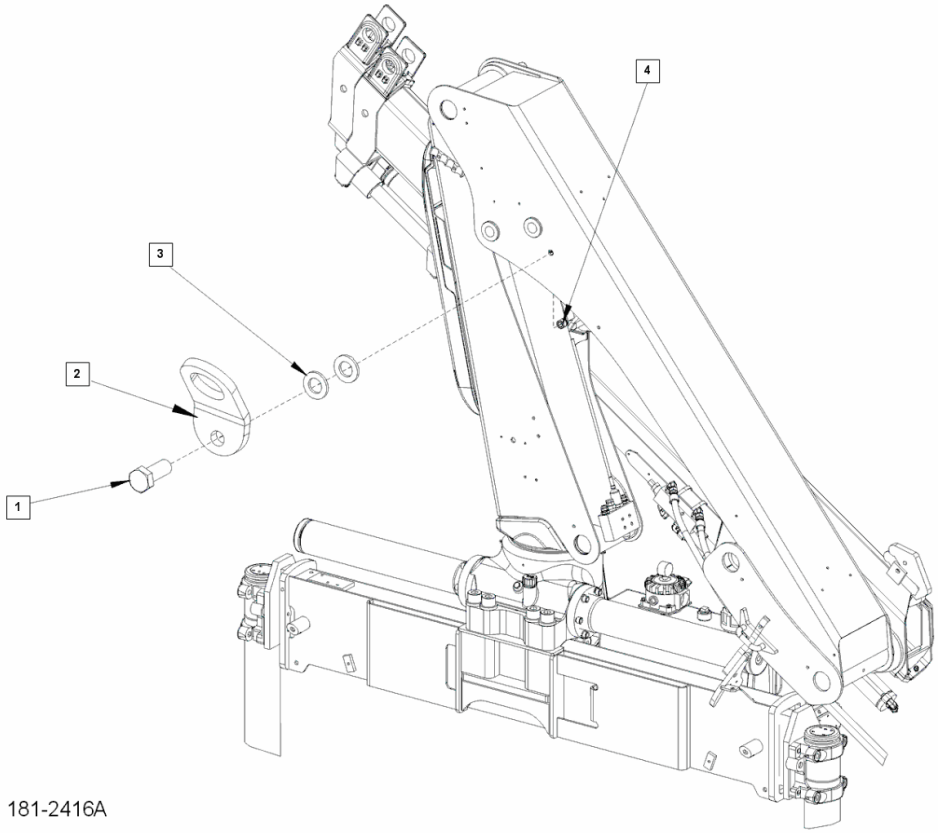

Pos	Part No	Description	Quantity
1	9924655	SCREW	2
2	4971264	LIFTING EYE	2
3	9910565	WASHER	4
4	9964487	LOCKING NUT	2

Model:BL088HD00027 Serial number: BL088HD00027 1817515

Chapter 1817515 Nipples valve 4F

1817515 - 1817515 Nipples valve 4F

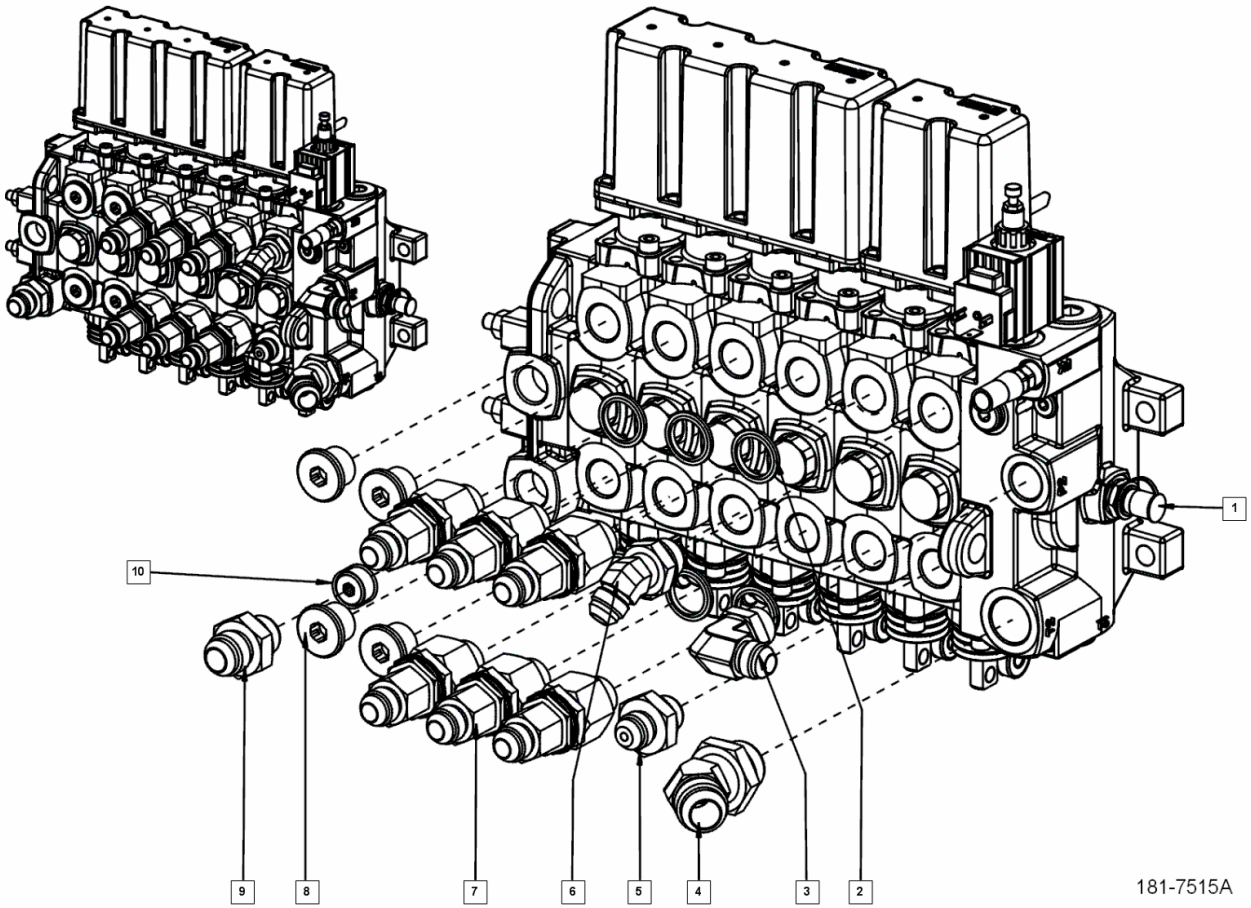

Pos	Part No	Description	Quantity
1	9989676	MEASUREMENT NIPPLE 1/4"	1
2	9904042	SEALING WASHER 21.5	6
3	9985379	ANGLE COUPLING 1/2"- RD.16	1
4	9821554	45DEG-COUPLING 3/4"- RD.20	1
5	9998438	STRAIGHT NIPPLE 1/2"- RD.12	1
6	9824111	45DEG-COUPLING 1/2"- RD.12	1
7	4978943	SWIVEL 3/4"-1/2"	6
8	3940560	STOP CPL. 1/2 "	4
9	9991662	STRAIGHT NIPPLE 1/2"- RD.16	1
10	9862617	PLUG	1

Model:BL088HD00027 Serial number: BL088HD00027 1833740

Chapter 1833740 Stabilizer legs mounting kit

1833740 - 1833740 Stabilizer legs mounting kit

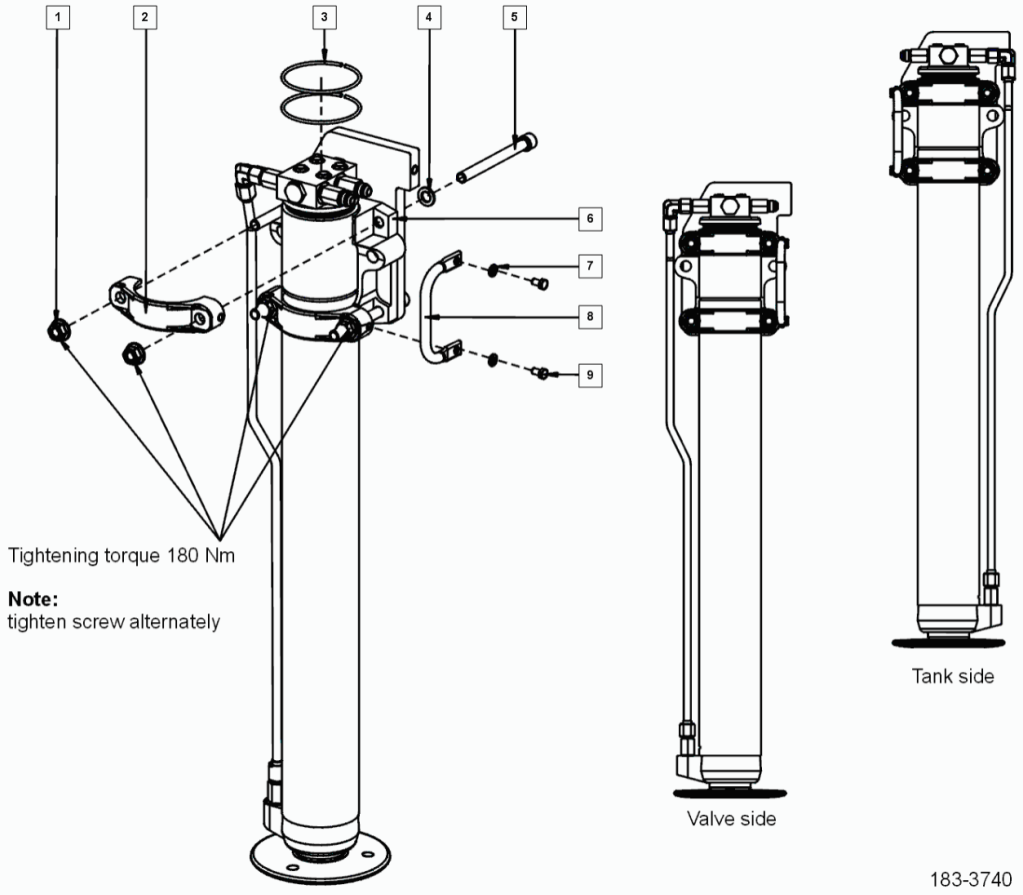

Pos	Part No	Description	Quantity
1	9966986	FLANGE NUT	4
2	3500691	CLAMP	2
3	3500721	LOCKING WIRE	2
4	9951491	WASHER	4
5	4472349	CH.SCREW M14X150	4
6	3569781	BRACKET	1
7	9903861	WASHER	2
8	3500004	HANDLE	1
9	9900403	HEXAGON HEAD SCREW	2

Model:BL088HD00027 Serial number: BL088HD00027 1833812

Chapter 1833812 Outrigger Kit Medium Hydr. 2300

1833812 - 1833812 Outrigger Kit Medium Hydr. 2300

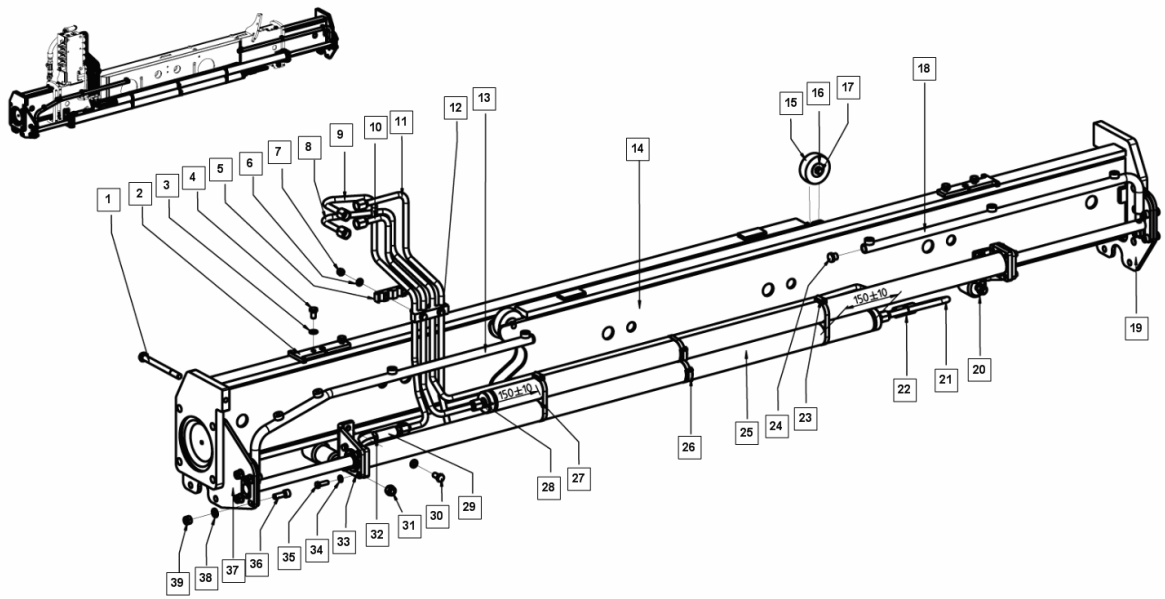

Pos	Part No	Description	Quantity
1	9993614	HEXAGON HEAD BOLT	2
2	1806025	LOCKING PLATE	2
3	9904140	SPRING WASHER	8
4	9924191	HEXAGON HEAD SCREW	4
5	4930690	CLAMP	2
6	9903861	WASHER	4
7	9965823	LOCKING NUT	2
8	1833839	HYDR.PIPE	1
9	1833928	HYDR.PIPE	1
10	1867253	HYDR.PIPE	1
11	1867105	HYDR.PIPE	1
12	9924086	HEXAGON HEAD BOLT	2
13	1866443	HOSE GUIDE	1
14	1805924	OUTRIGGER BEAM	2
15	3567851	ROLLER	2
16	9998161	BALL BEARING	4
17	1824830	SHAFT	2
18	1866486	HOSE GUIDE	1
19	1866435	PLATE	1
20	1811843	ROLL	2
21	1867041	HYDR.PIPE	1
22	9819231	NIPPLE	1
23	9917799	HOSE CLAMP	2
24	1867091	CAP	2
25	1866842	HYDR.CYLINDER 40/25-1350	2
26	9925228	HOSE CLAMP	2
27	1866541	SUPPORT	2
28	9821368	COUPLING	2
29	9876073	SEQUENCE VALVE	2
30	9924205	HEXAGON HEAD SCREW	4
31	9953523	LOCKING NUT	2
32	4480201	NIPPLE 3/8	2
33	1866630	BRACKET	2
34	9904131	SPRING WASHER	8
35	9900420	HEXAGON HEAD SCREW	8
36	9922512	SCREW	8
37	1866427	PLATE	1
38	9914111	WASHER	4
39	9964347	LOCKING NUT	8

Model:BL088HD00027 Serial number: BL088HD00027 1843851

Chapter 1843851 Operating base 2300 ext 4 (4F)

1843851 - 1843851 Operating base 2300 ext 4 (4F)

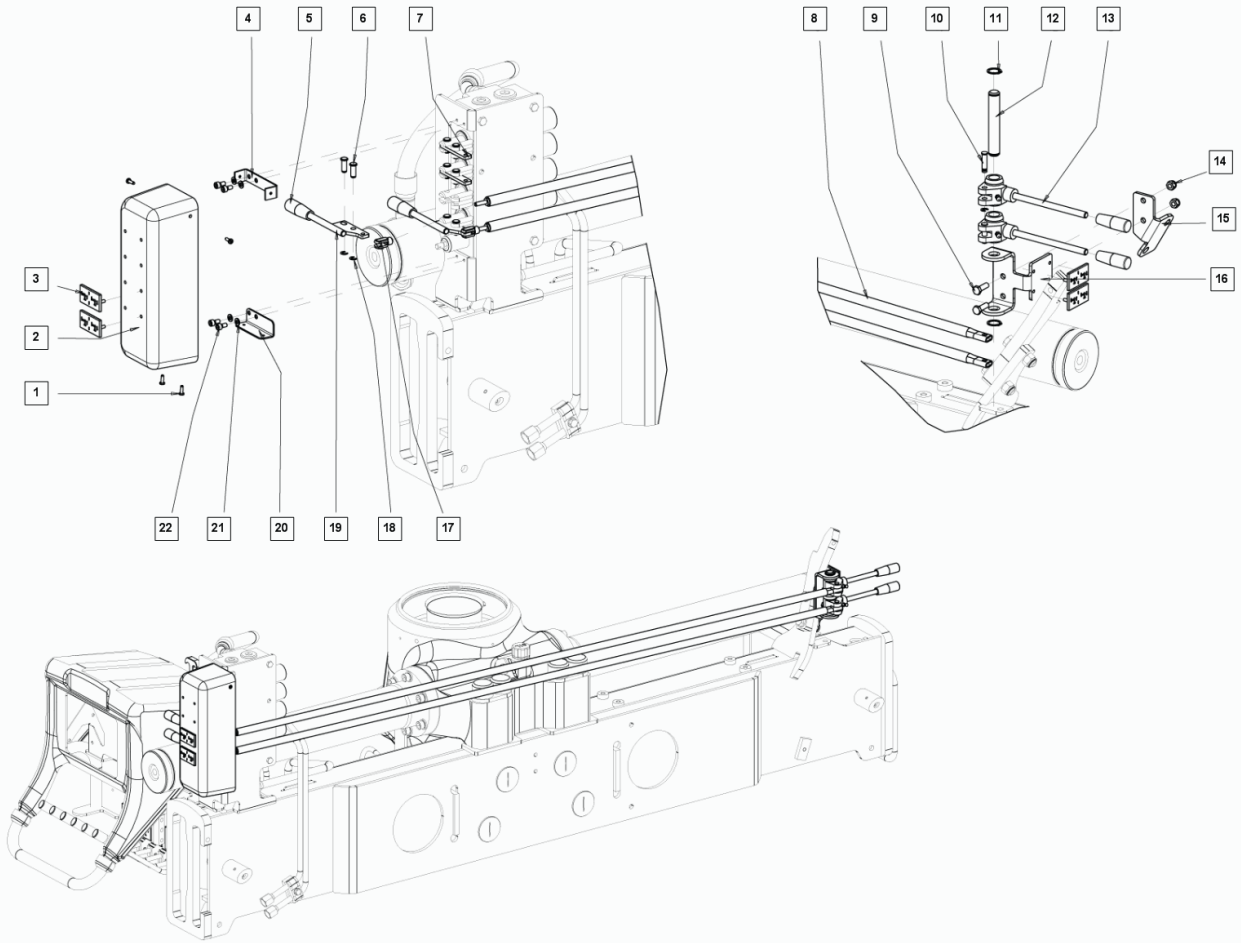

Pos	Part No	Description	Quantity
1	9925791	SCREW	4
2	4978633	COVER	1
3	3596109	SYMBOL SIGN	4
4	4978684	BRACE	1
5	9809945	HANDLE	4
6	3010767	BOLT	8
7	1891456	PLATE	2
8	1868659	CONTROL ROD CPL.	2
9	9900420	HEXAGON HEAD SCREW	2
10	3905853	BOLT	2
11	9950711	RETAING RING	2
12	1868675	SHAFT	1
13	3518540	LEVER	2
14	9965823	LOCKING NUT	2
15	1868616	FOLDED PLATE	1
16	1868624	SUPPORT	1
17	1843796	FORK JOINT 6X12 (M6)	2
18	9949305	RETAINING RING	10
19	1868586	CONTROL LEVER CPL.	2
20	4979168	BRACE	1
21	9904115	SPRING WASHER	4
22	9990623	SCREW	4

Model:BL088HD00027 Serial number: BL088HD00027 1843966

Chapter 1843966 Clamp on kit (medium)

1843966 - 1843966 Clamp on kit (medium)

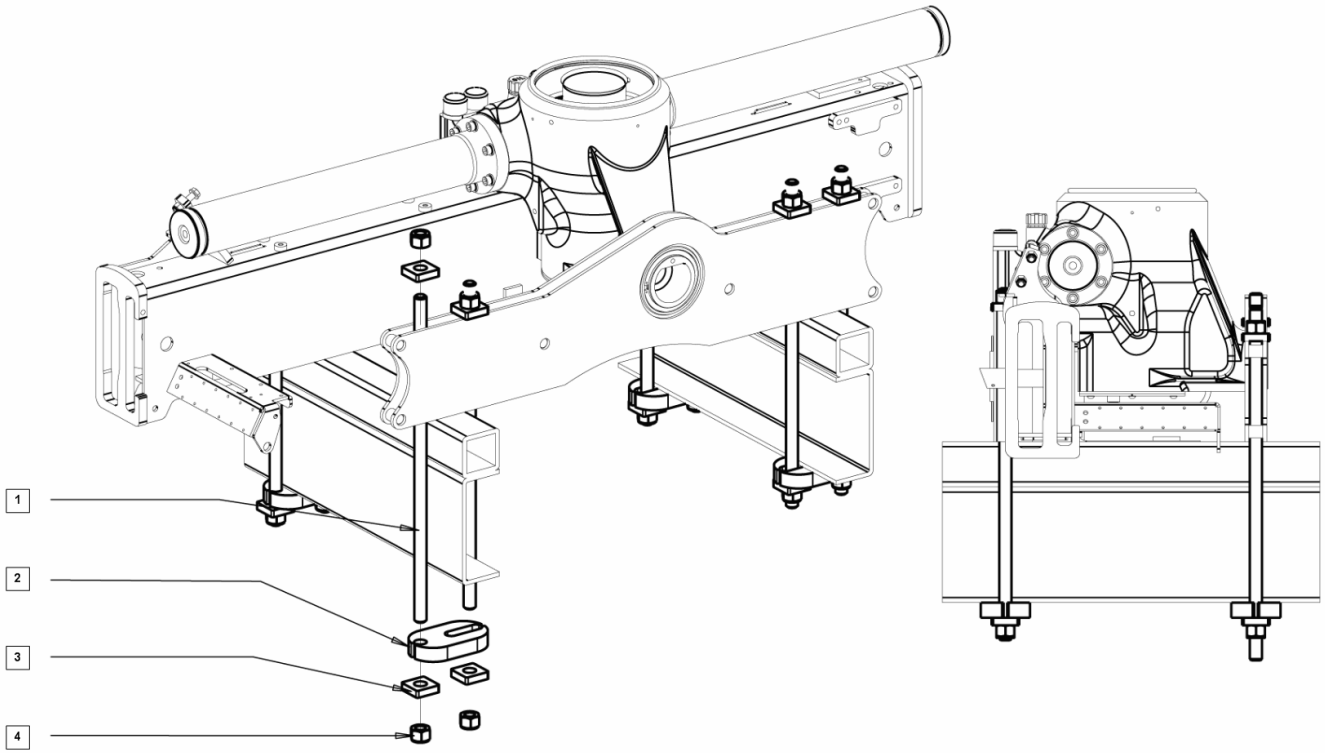

Pos	Part No	Description	Quantity
1	1843516	STUD BOLT M24X2 LG.700	8
2	3046125	WASHER	4
3	3815242	WASHER	16
4	9813853	LOCKING NUT M24X2	16

Model:BL088HD00027 Serial number: BL088HD00027 1865692

Chapter 1865692 Tilt indicator 1st boom OPS

1865692 - 1865692 Tilt indicator 1st boom OPS

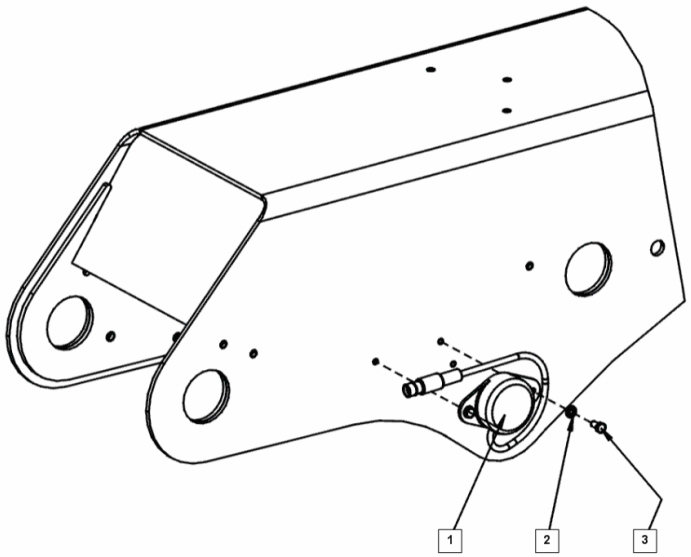

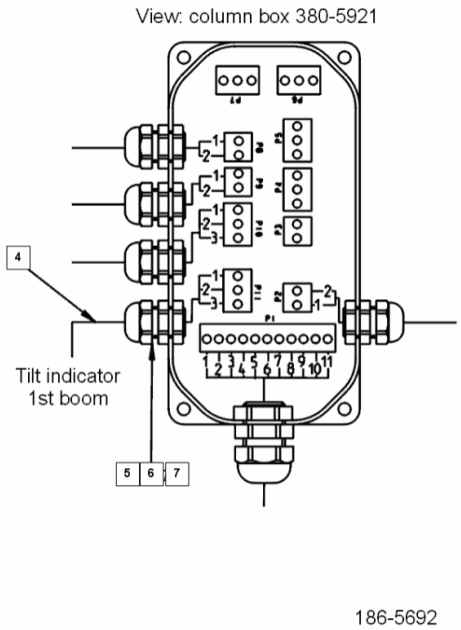

Pos	Part No	Description	Quantity
1	9873481	TILT INDICATOR	1
2	9903844	WASHER	2
3	9900349	HEXAGON HEAD SCREW	2
4	3668771	CABLE	1
5	9827242	CONDUIT ENTRY	1
6	9921265	O-RING	1
7	9828010	NUT	1

Model:BL088HD00027 Serial number: BL088HD00027 1865706

Chapter 1865706 Tilt indicator 2nd boom

1865706 - 1865706 Tilt indicator 2nd boom

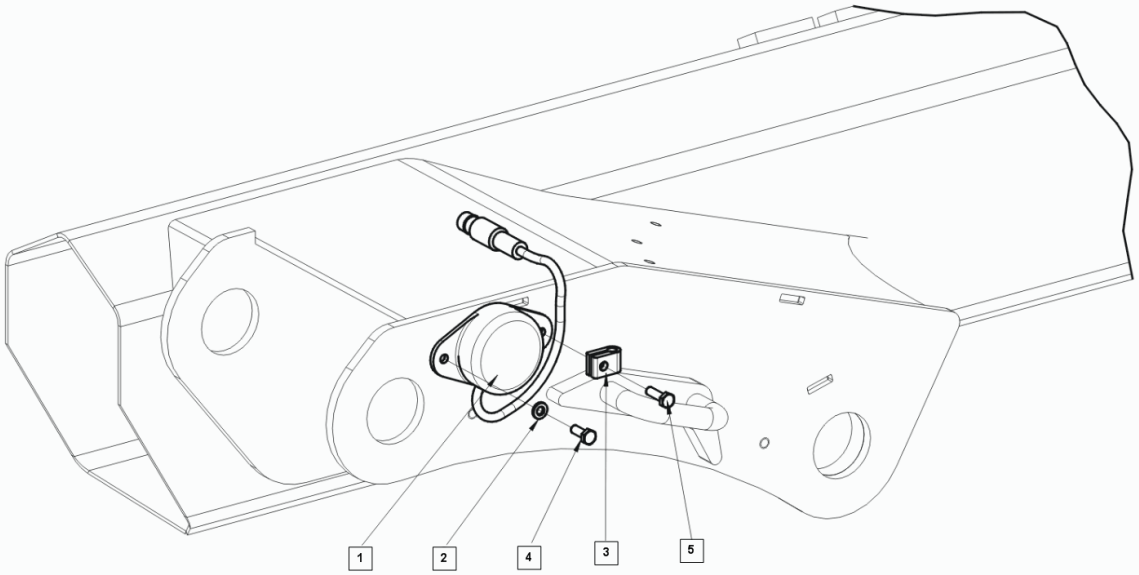

186-5706D

Pos	Part No	Description	Quantity
1	9873481	ANALOGUE TILT INDICATOR	1
2	9903844	WASHER	1
3	1885766	HOSECLAMP	1
4	9900357	SCREW	1
5	9923926	SCREW	1

Model:BL088HD00027 Serial number: BL088HD00027 1866656

Chapter 1866656 Pipe kit base ext. 4F, stab. guide

1866656 - 1866656 Pipe kit base ext. 4F, stab. guide

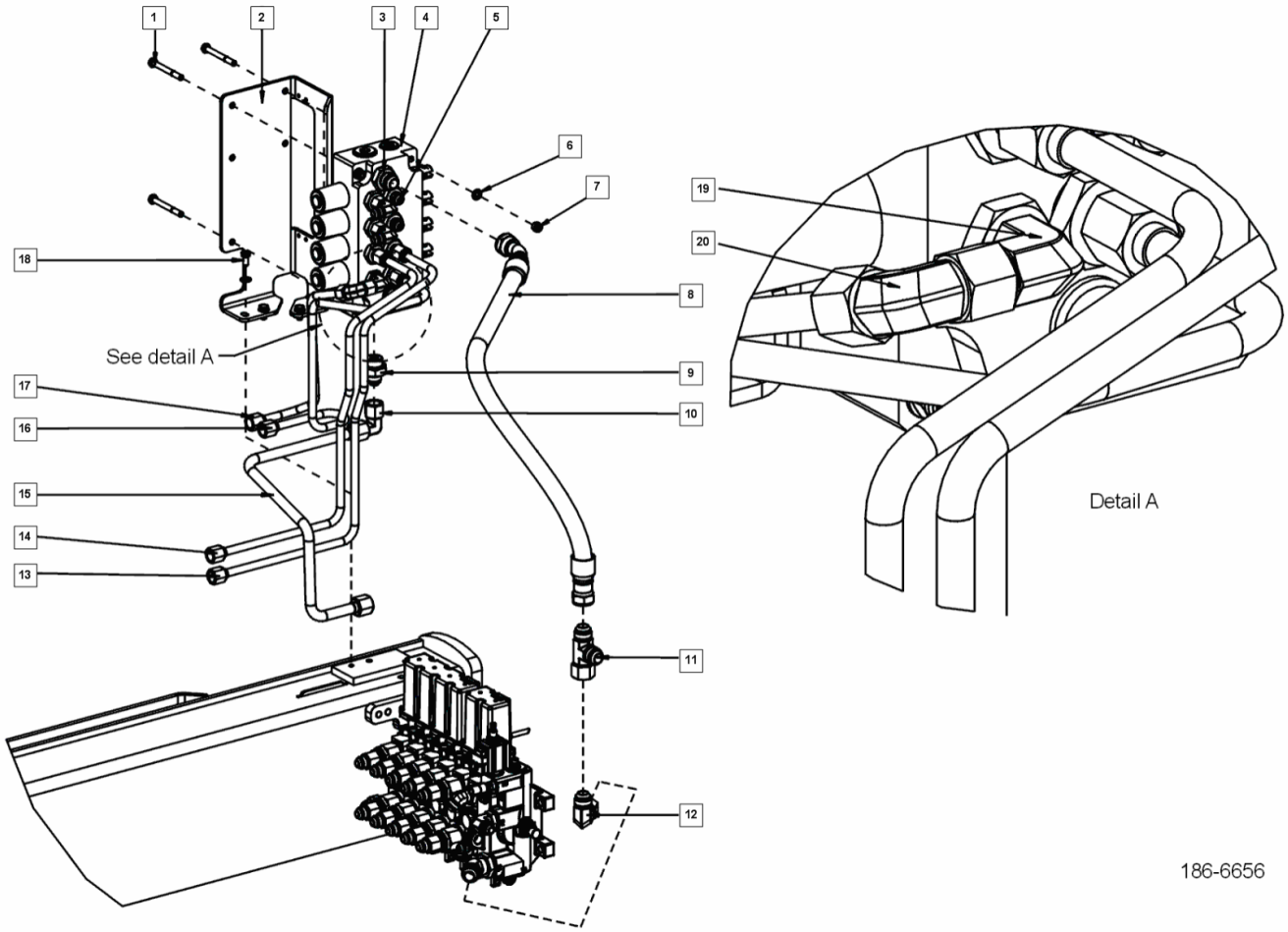

Pos	Part No	Description	Quantity
1	9924141	HEXAGON HEAD BOLT	3
2	4978668	CONSOLE	1
3	9988092	COUPLING	1
4	9853341	CONTROL VALVE	1
5	9998438	COUPLING	7
6	9903861	WASHER	6
7	9965823	LOCKING NUT	3
8	9859357	HP HOSE	1
9	9814507	COUPLING	1
10	9988394	ANGLE COUPLING	1
11	9822615	L-COUPLING	1
12	9821767	ANGLE COUPLING	1
13	4978790	HYDR.PIPE	1
14	4978781	HYDR.PIPE	1
15	4978838	HYDR.PIPE	1
16	1866672	HYDR.PIPE	1
17	1866664	HYDR.PIPE	1
18	9906878	HEXAGON HEAD SCREW	3
19	9821449	ANGLE COUPLING	1
20	9819975	ANGLE COUPLING	3

1866656 Pipe kit base ext. 4F, stab. guide - 1866656

Model:BL088HD00027

Serial number: BL088HD00027

1866826

Chapter

1866826 Beam 2300 base hydr.

1866826 - 1866826 Beam 2300 base hydr.

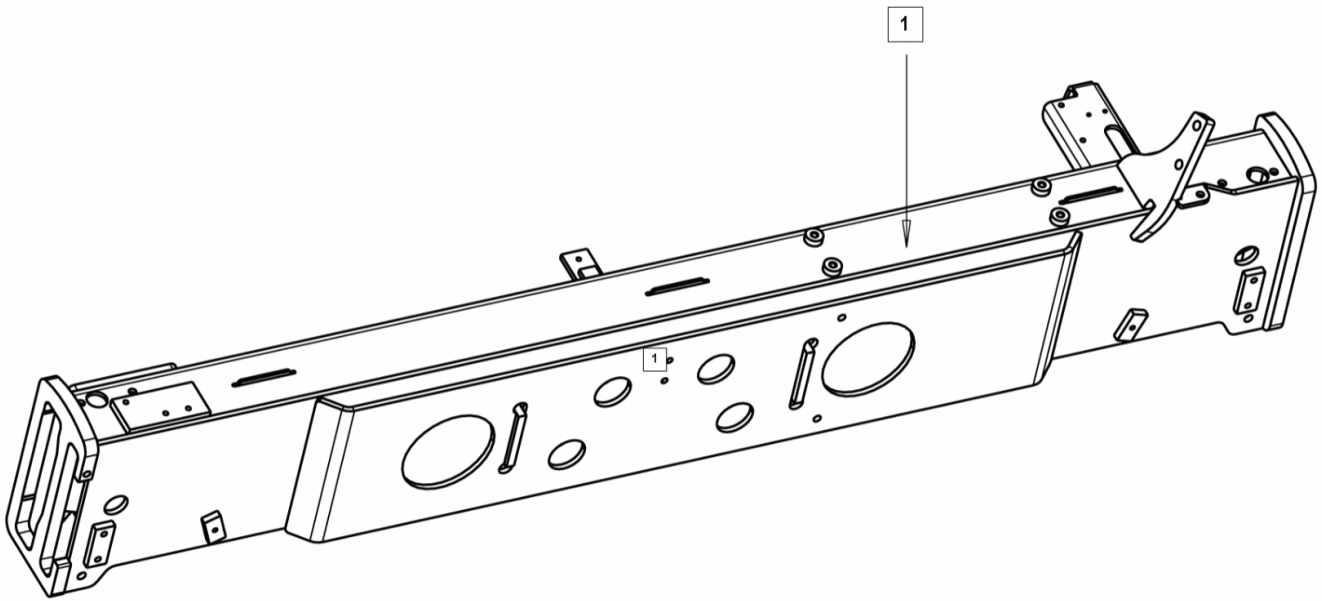

Pos	Part No	Description	Quantity
1	1866826	BEAM	1

Model:BL088HD00027 Serial number: BL088HD00027 1867181

Chapter 1867181 Channel kit 2300 base

1867181 - 1867181 Channel kit 2300 base

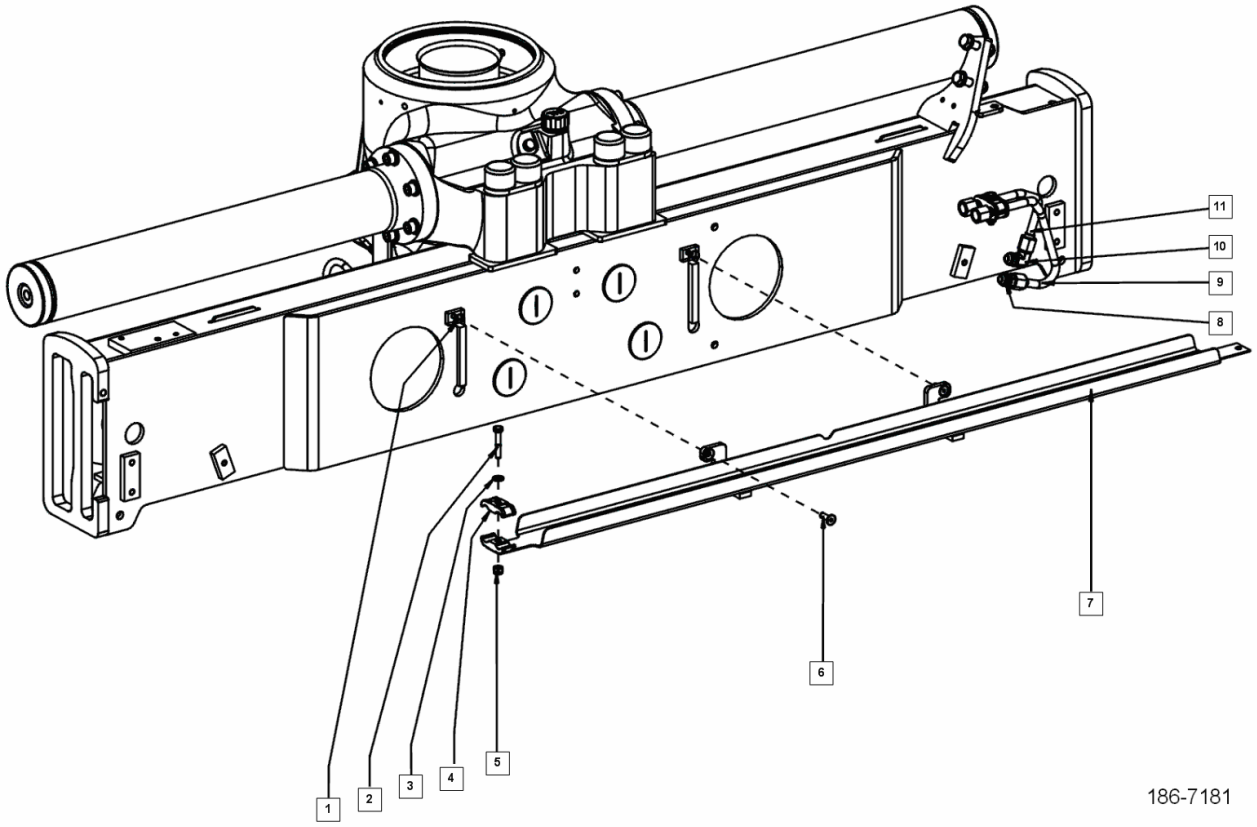

Pos	Part No	Description	Quantity
1	1866591	LOCKING PLATE	2
2	9924086	HEXAGON HEAD BOLT	2
3	9903861	WASHER	2
4	8912670	CLAMP	4
5	9965823	LOCKING NUT	2
6	9973371	SCREW	2
7	1867199	HOSE CHANNEL	1
8	9819231	NIPPLE	1
9	1866699	HYDR.PIPE	1
10	9819843	ANGLE NIPPLE	1
11	1866702	HYDR.PIPE	1

Model:BL088HD00027 Serial number: BL088HD00027 1867539

Chapter 1867539 Medium stab. ext., fixed legs

1867539 - 1867539 Medium stab. ext., fixed legs

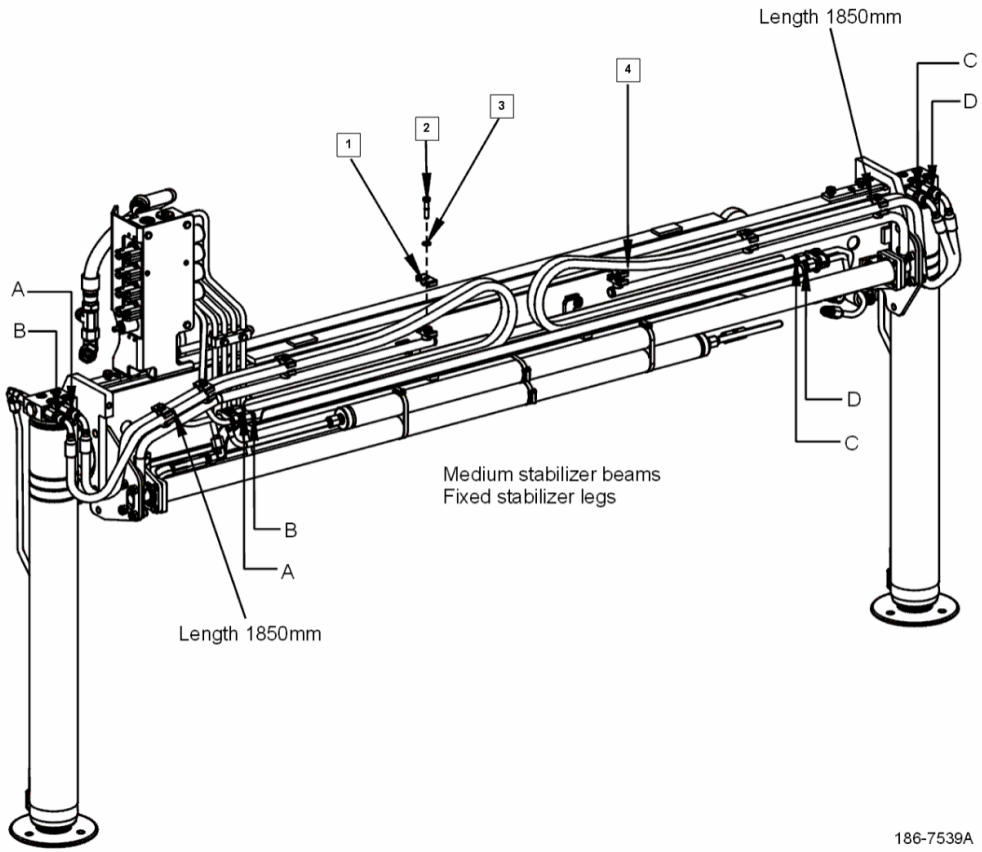

Pos	Part No	Description	Quantity
1	3197336	CLAMP	14
2	9924078	HEXAGON HEAD BOLT	7
3	9903861	WASHER	7
4	9875417	HP HOSE	4

Model:BL088HD00027 Serial number: BL088HD00027 1880004

Chapter 1880004 Stabilizer legs (medium)

1880004 - 1880004 Stabilizer legs (medium)

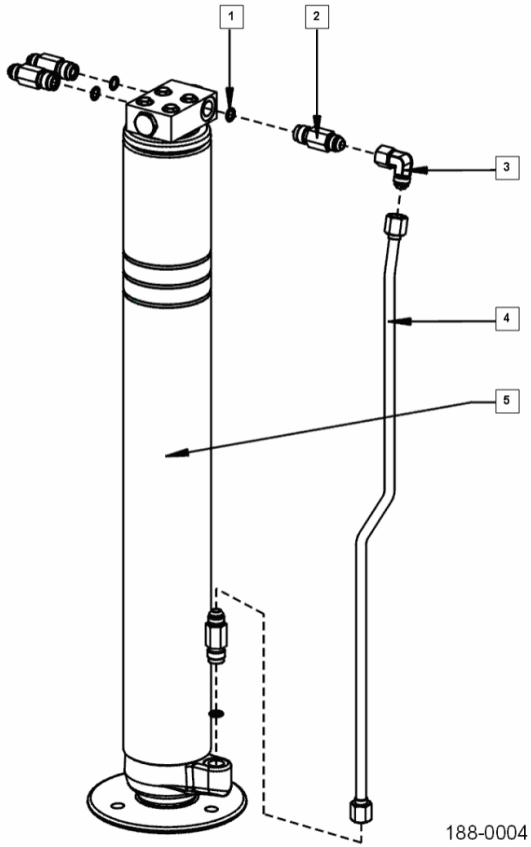

Pos	Part No	Description	Quantity
1	9818367	O-RING	8
2	3569772	NIPPLE	8
3	9819975	ANGLE COUPLING	2
4	1880012	HYDR.PIPE	2
5	3719022	STABILIZER LEG	2

Model:BL088HD00027 Serial number: BL088HD00027 1880152

Chapter 1880152 Grease nipples

1880152 - 1880152 Grease nipples

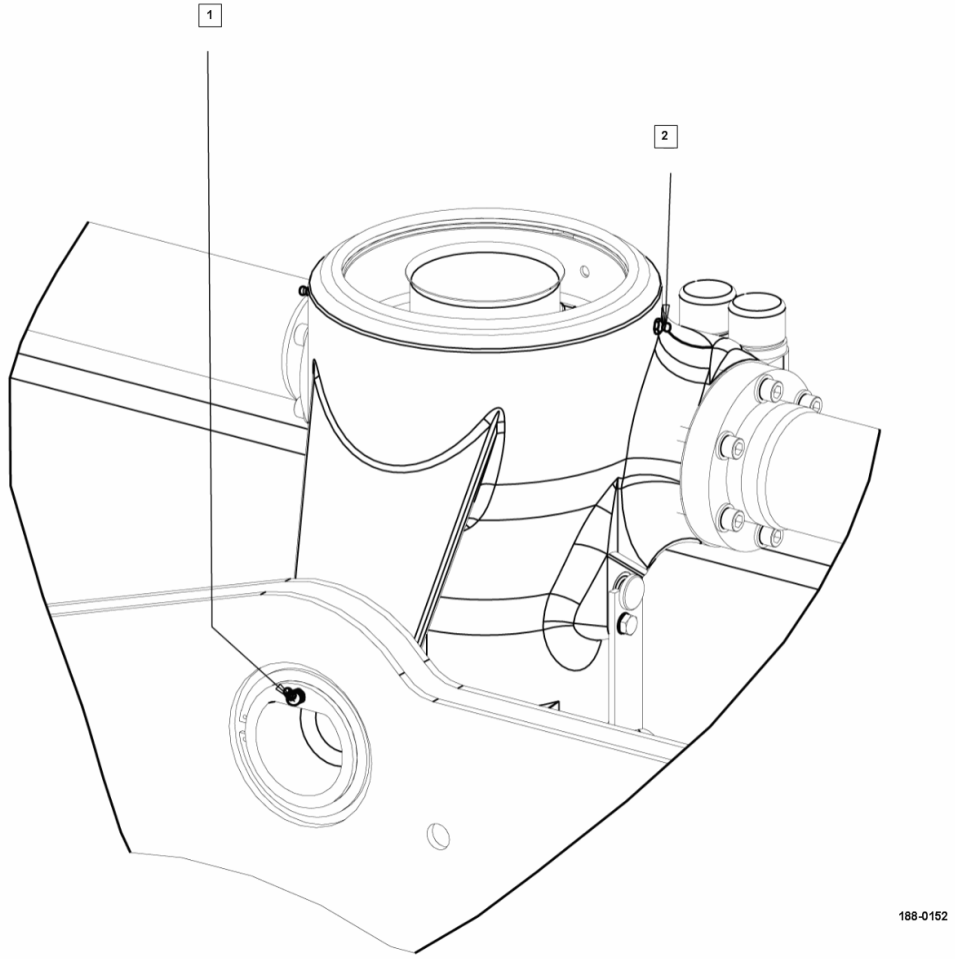

Pos	Part No	Description	Quantity
1	9915672	GREASE NIPPLE	1
2	9906185	GREASE NIPPLE	2

Model:BL088HD00027 Serial number: BL088HD00027 1880551

Chapter 1880551 XS drive kit remote control by cable

1880551 - 1880551 XS drive kit remote control by cable

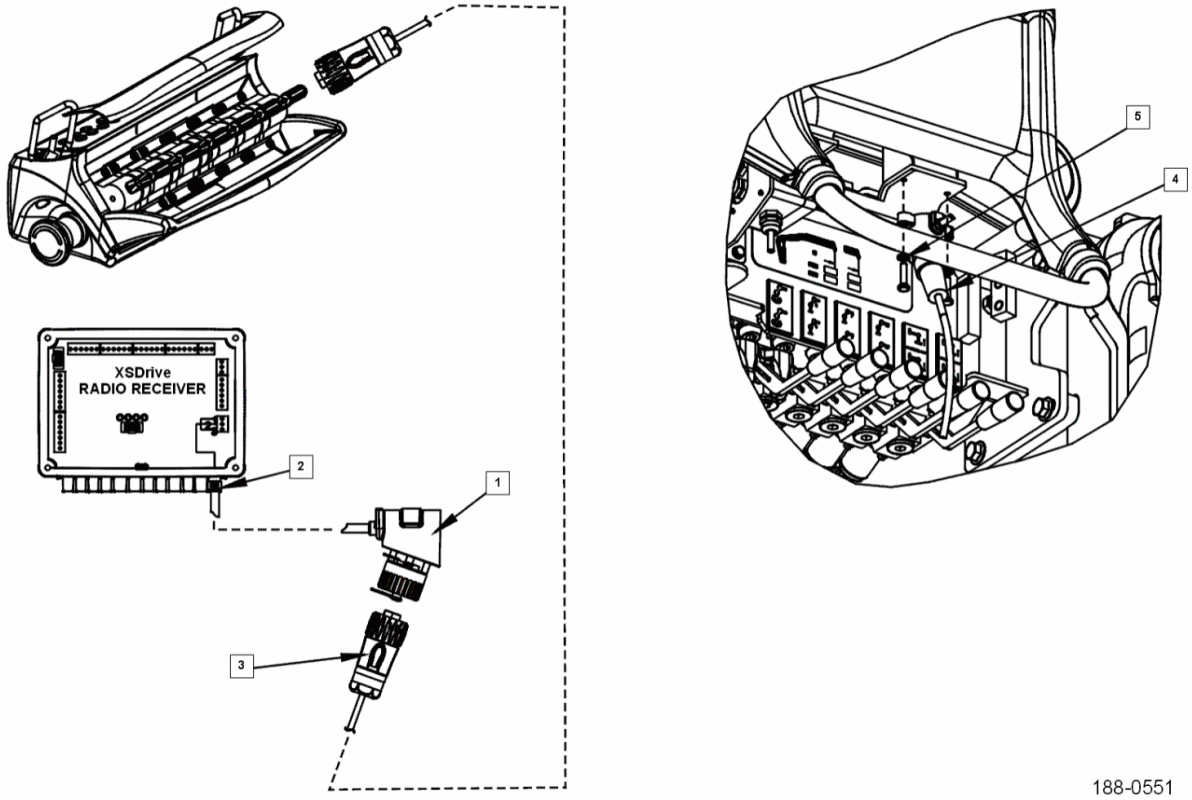

Pos	Part No	Description	Quantity
1	3806154	CONNECTOR	1
2	9854835	CLIP	1
3	3813347	CABLE	1
4	9923748	HEXAGON HEAD SCREW	2
5	9908242	WASHER	2

1880551 XS drive kit remote control by cable - 1880551

Model:BL088HD00027 Serial number: BL088HD00027 1947621

Chapter 1947621 Light kit ,std

1947621 - 1947621 Light kit ,std

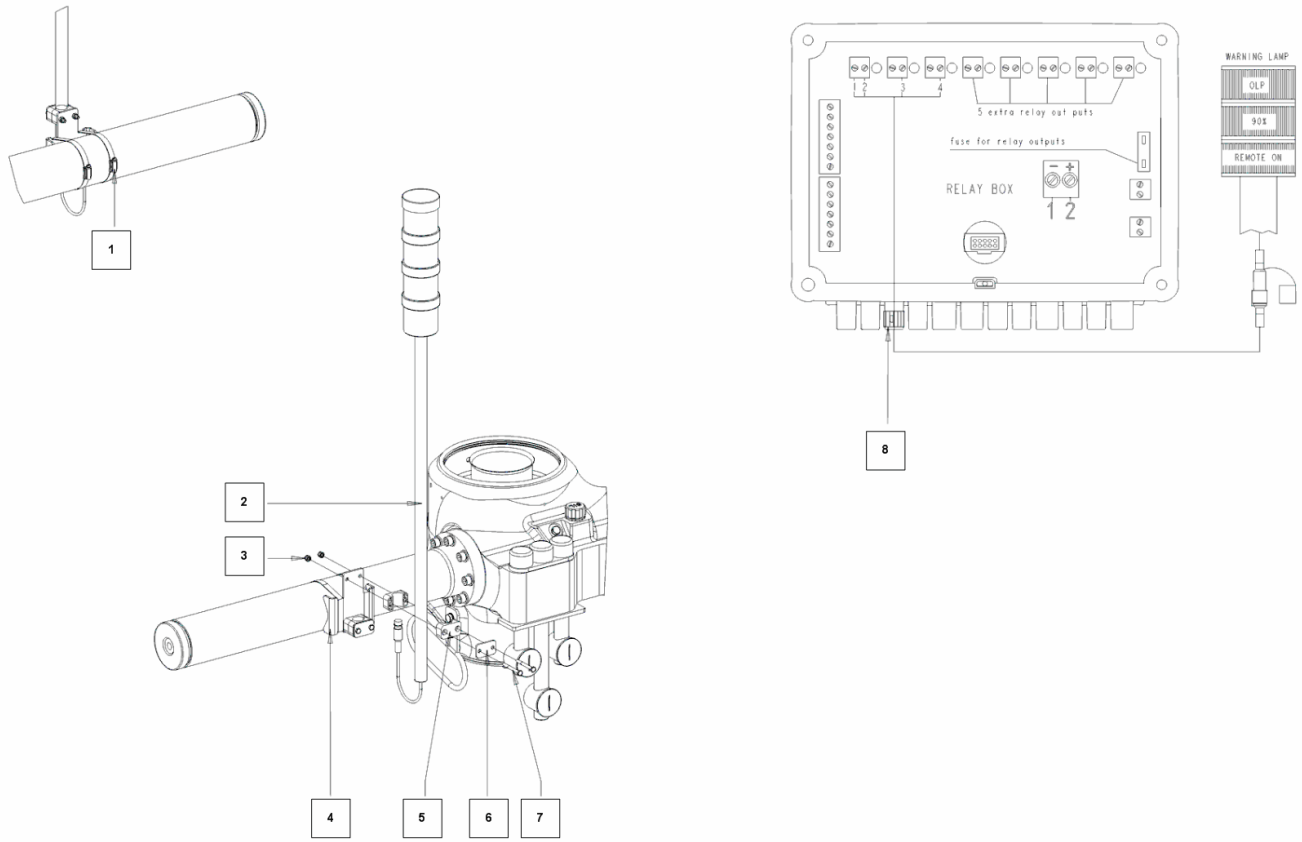

Pos	Part No	Description	Quantity
1	9937587	HOSE CLAMP	2
2	3736989	WARNING KIT	1
3	9929410	LOCKING NUT	4
4	1803620	SUPPORT	1
5	8497559	CLAMP	4
6	8426783	PLATE	2
7	9923951	SCREW	4
8	9854835	CLIP	1

Model:BL088HD00027 Serial number: BL088HD00027 1947923

Chapter 1947923 Oil cooler mounted

1947923 - 1947923 Oil cooler mounted

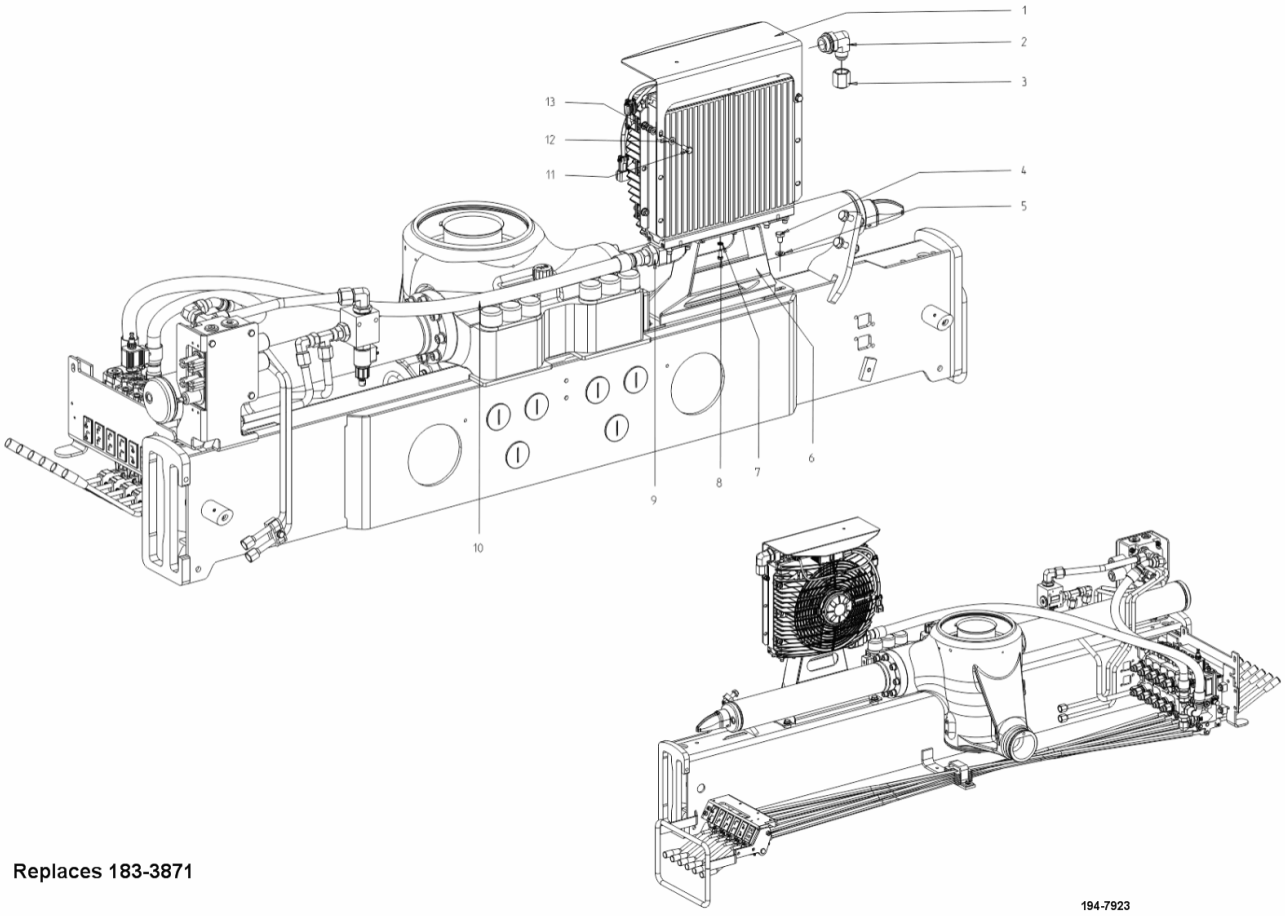

Replaces 183-3871

Pos	Part No	Description	Quantity
1	396-5554	Protector	1
2	9819789	ANGLE NIPPLE	1
3	9985433	NUT	1
4	9980270	SCREW	4
5	9914111	WASHER M10	4
6	194-7931	SUPPORT	1
7	9904115	SPRING WASHER M6	8
8	9900357	SCREW	8
9	9872710	COUPLING	1
10	9870610	HP HOSE	1
11	9924051	SCREW	2
12	9903861	WASHER M8	4
13	9965823	LOCKING NUT	2
14	396-5805	CABLE	1

Model:BL088HD00027 Serial number: BL088HD00027 1973142

Chapter 1973142 Slewing house mounted

1973142 - 1973142 Slewing house mounted

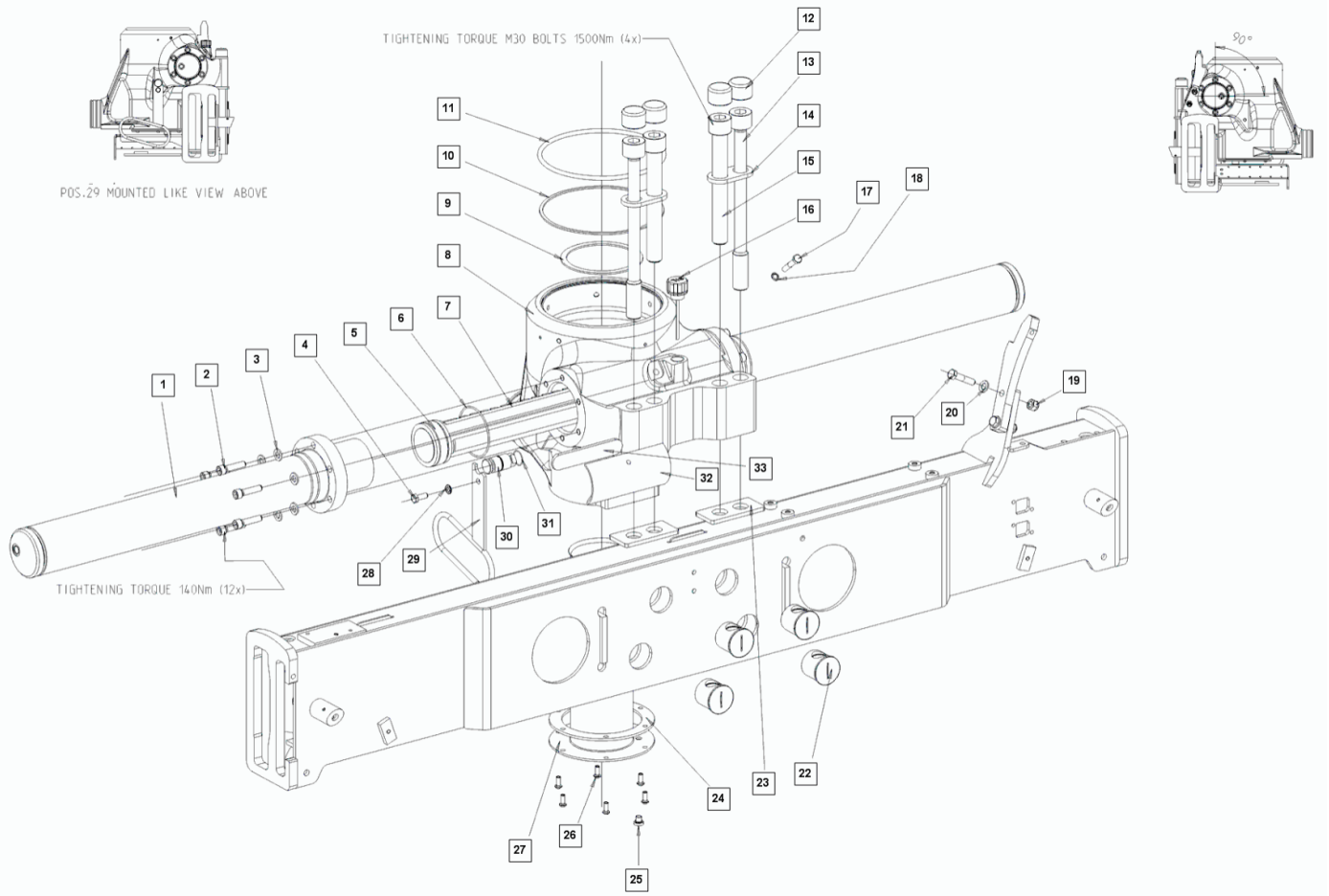

Pos	Part No	Description	Quantity
1	1971573	SLEWING CYLINDER	2
2	9922695	SCREW	12
3	9836187	WASHER	12
4	9900471	SCREW	1
5	7116672	SEAL RING	2
6	9933476	O-RING	2
7	3549143	SLEWING PISTON	1
8	1973371	SLEWING HOUSING	1
9	3403904	RING	1
10	9820043	RETAINING RING	1
11	9921885	O-RING	1
12	1830767	HOOD	4
13	1805401	SCREW	2
14	1834819	PLATE	2
15	9824391	SCREW	2
16	1811932	LEVEL SCALE	1
17	9900519	SCREW	1
18	9939415	SEAL WASHER	1
19	9953523	LOCKING NUT	2
20	9914129	WASHER M12	2
21	9924370	SCREW	2
22	1834801	NUT	4
23	1838563	PLATE	2
24	1805665	SEAL RING	1
25	9819622	PLUG	1
26	9876189	SCREW	6
27	1805649	SLEEVE	1
28	9904140	SPRING WASHER M10	1
29	1816039	BRACKET	1
31	1806084	LOCKING PIN	1
32	9921338	O-RING	1
33	1805614	GUIDE	1
34	3493539	SLIDE PAD	1

Model:BL088HD00027 Serial number: BL088HD00027 1973177

Chapter 1973177 Pipe kit base 2300

1973177 - 1973177 Pipe kit base 2300

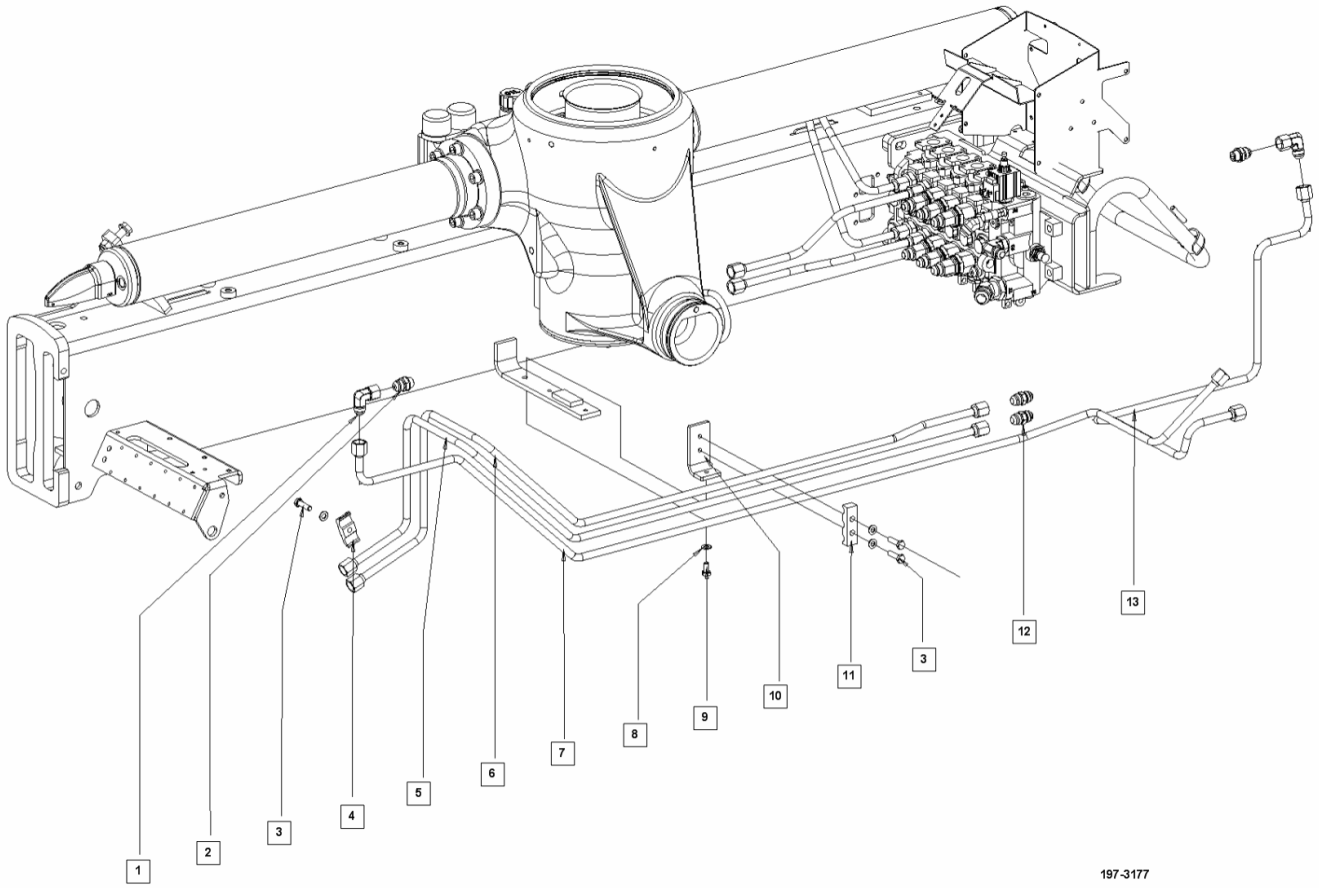

Pos	Part No	Description	Quantity
1	9819975	ANGLE COUPLING	2
2	9819223	NIPPLE	2
3	9900438	SCREW	3
4	8912670	CLAMP	1
5	1816021	HYDRAULIC PIPE	1
6	1816012	HYDRAULIC PIPE	1
7	1971581	HYDRAULIC PIPE	1
8	9903861	WASHER M8	4
9	9906878	SCREW	1
10	1811738	MOUNTING KIT	1
11	1811746	CLAMP	1
12	9819231	NIPPLE	2
13	1971590	HYDRAULIC PIPE	1

Model:BL088HD00027 Serial number: BL088HD00027 1974424

Chapter 1974424 2nd boom B/BS cylinder HIDUO cpl.

1974424 - 1974424 2nd boom B/BS cylinder HIDUO cpl.

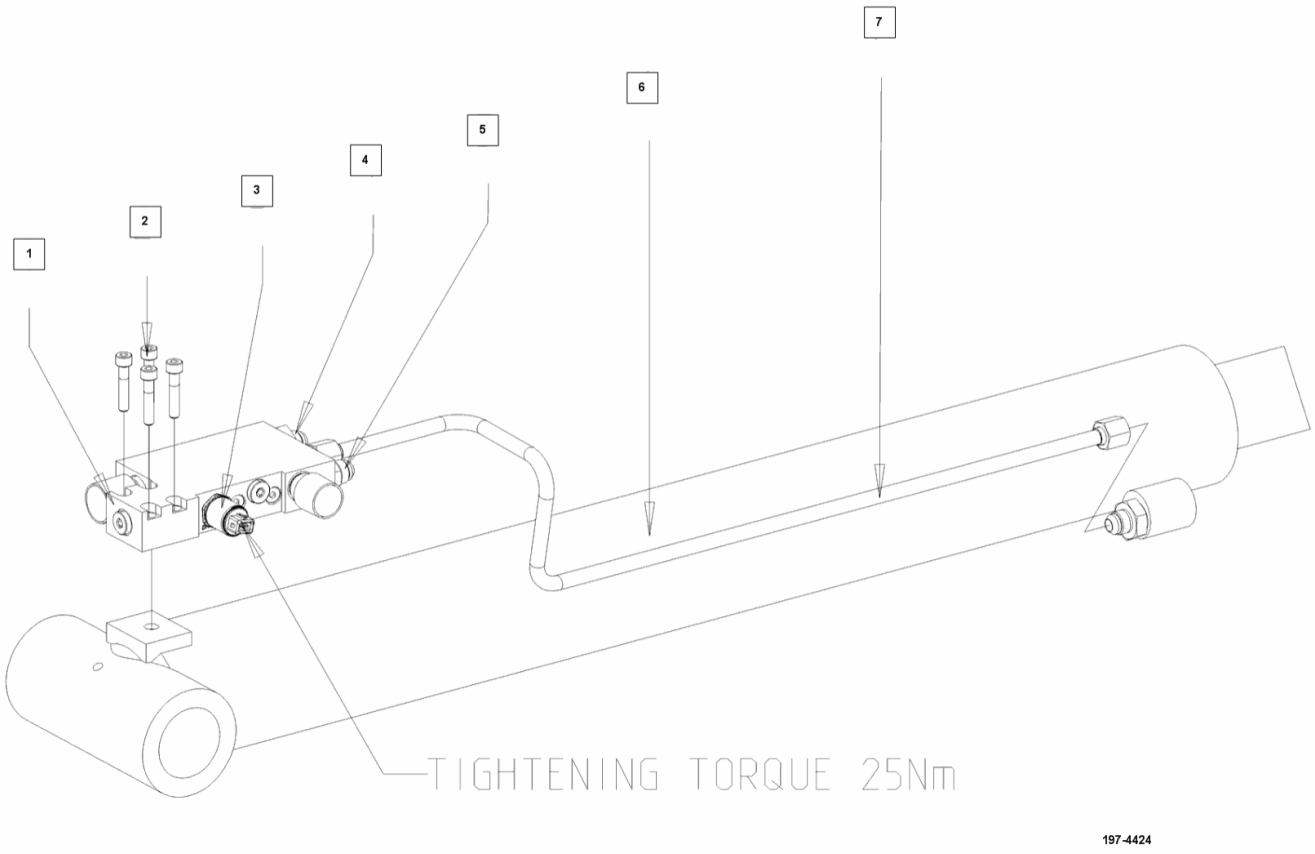

Pos	Part No	Description	Quantity
1	3962326	LOAD HOLDING VALVE	1
2	9901256	SCREW	4
3	3957888	PRESSURE	1
4	9998438	NIPPLE	2
5	9819223	NIPPLE	2
6	4971370	CYLINDER	1
7	1974319	HYDRAULIC PIPE	1

Model:BL088HD00027 Serial number: BL088HD00027 1979426

Chapter 1979426 Column box cpl.

1979426 - 1979426 Column box cpl.

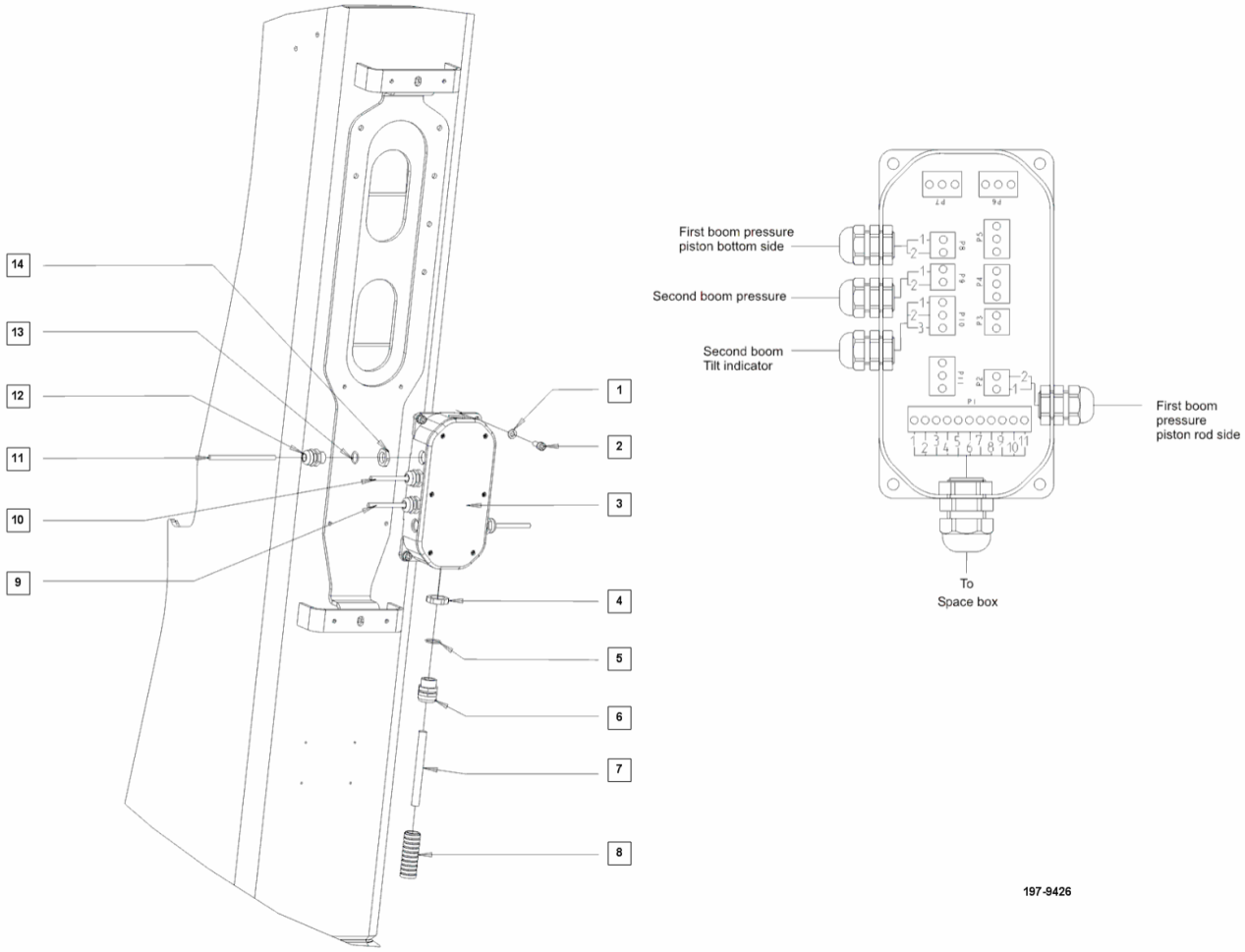

Pos	Part No	Description	Quantity
1	9903844	WASHER M6	4
2	9990631	SCREW	4
3	3805921	ELECTRONIC BOX	1
4	9828061	NUT	1
5	9921290	O-RING	1
6	9827269	CONDUIT ENTRY	1
7	3724441	CABLE	1
8	3721370	HOSE	1
9	3813371	CABLE	1
10	3853357	CABLE	1
11	3864171	CABLE	2
12	9827242	CONDUIT ENTRY	4
13	9921265	O-RING	4
14	9828010	NUT	4

Model:BL088HD00027 Serial number: BL088HD00027 1980106

Chapter 1980106 1st B-boom cyl. HIDUO (column 2000)

1980106 - 1980106 1st B-boom cyl. HIDUO (column 2000)

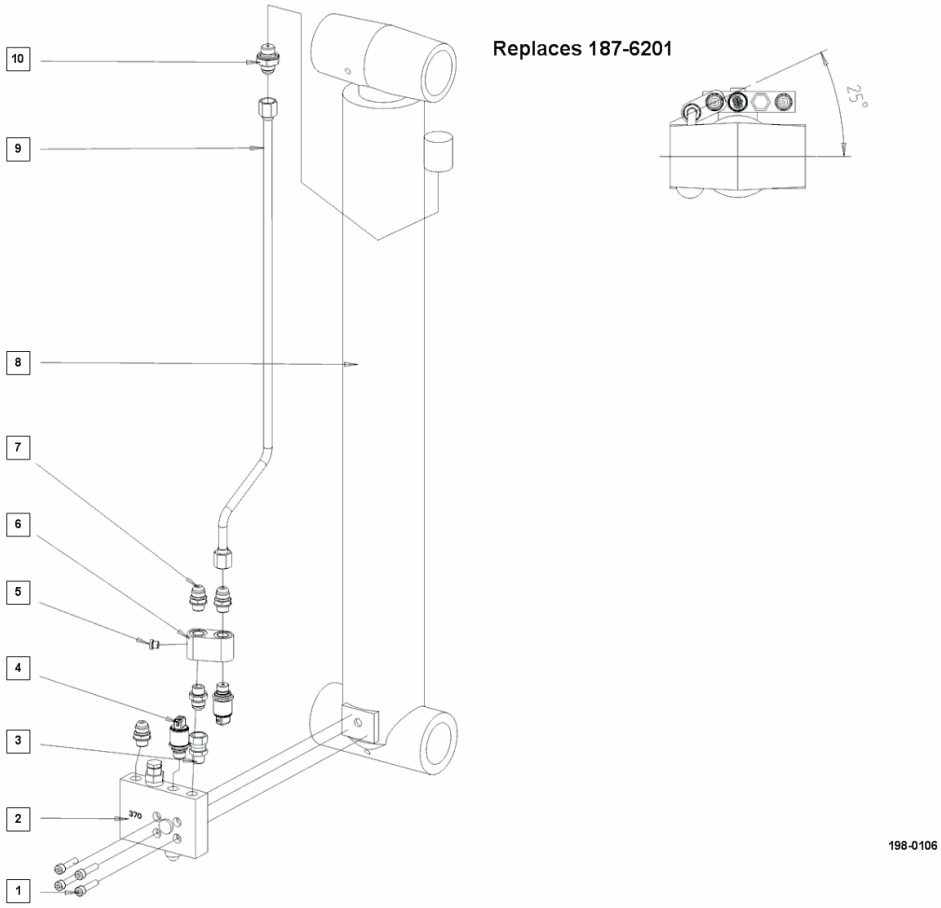

Pos	Part No	Description	Quantity
1	9922369	SCREW	4
2	3962938	LOAD HOLDING VALVE	1
3	9822151	NIPPLE	1
4	3958124	PRESSURE SENSOR	2
5	9993746	PLUG	1
6	1860721	CONNECTION VALVE	1
7	9819223	NIPPLE	4
8	4971388	1ST BOOM CYLINDER	1
9	1876295	HYDRAULIC PIPE	1
10	9998438	NIPPLE	1

Model:BL088HD00027 Serial number: BL088HD00027 1982010

Chapter 1982010 Operating cable 4 F remote

1982010 - 1982010 Operating cable 4 F remote

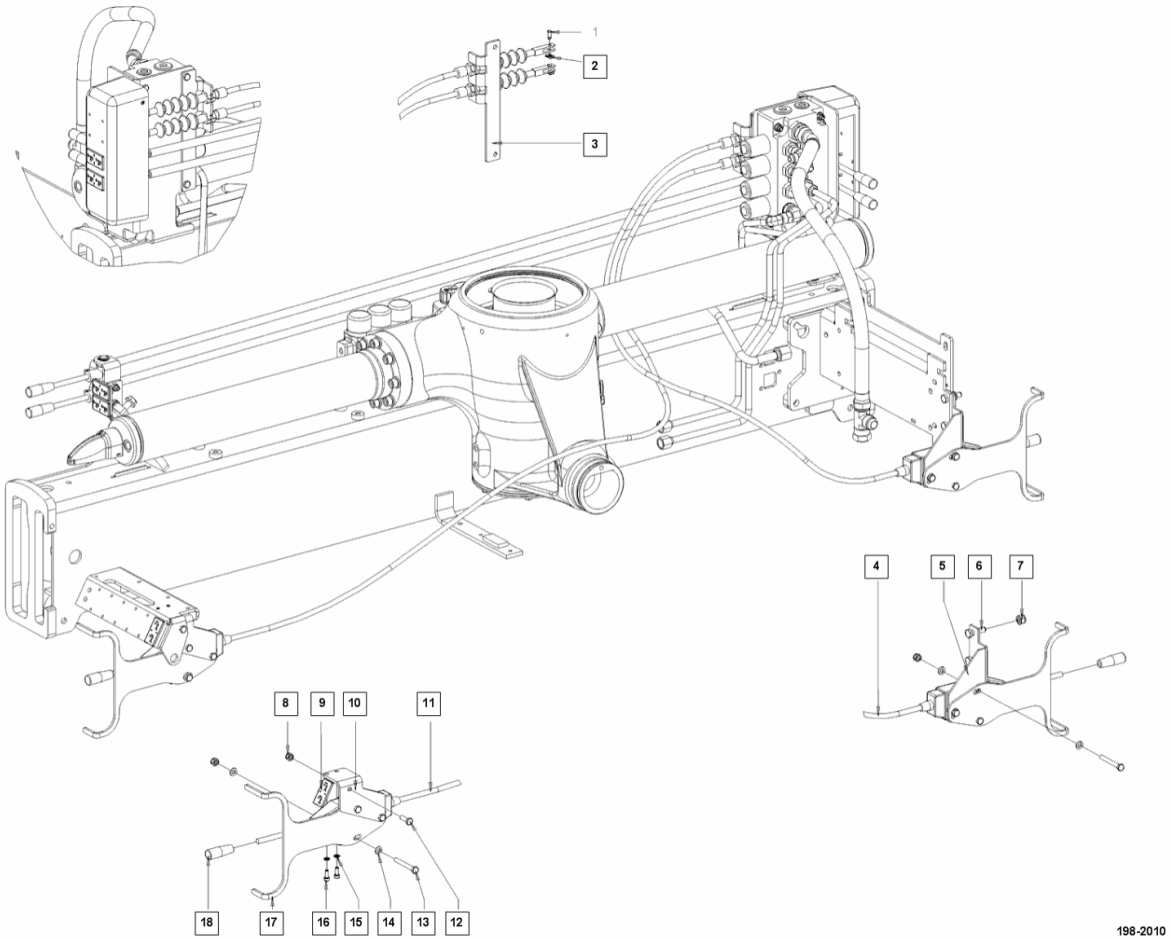

Pos	Part No	Description	Quantity
1	9952217	BOLT	2
2	9810005	SECURING PLATE	2
3	1843885	PLATE	1
4	1921291	CONTROL CABLE	1
5	1919695	FOLDED PALTE	1
6	9900489	SCREW	2
7	9964347	LOCKING NUT	2
8	9965823	LOCKING NUT	7
9	3815358	SYMBOL SIGN	2
10	1871218	PLATE	1
11	3832694	CONTROL CABLE	1
12	9900420	SCREW	1
13	9924124	SCREW	6
14	9903861	WASHER M8	9
15	9904115	SPRING WASHER M6	2
16	9990631	SCREW	2
17	1843877	PROTECTION PLATE	2
18	9809945	KNOB	2

Model:BL088HD00027

Chapter

Serial number: BL088HD00027

1990021

990021 Space 4000 one side control or seperate CEN

1990021 - 1990021 Space 4000 one side control or seperate CEN

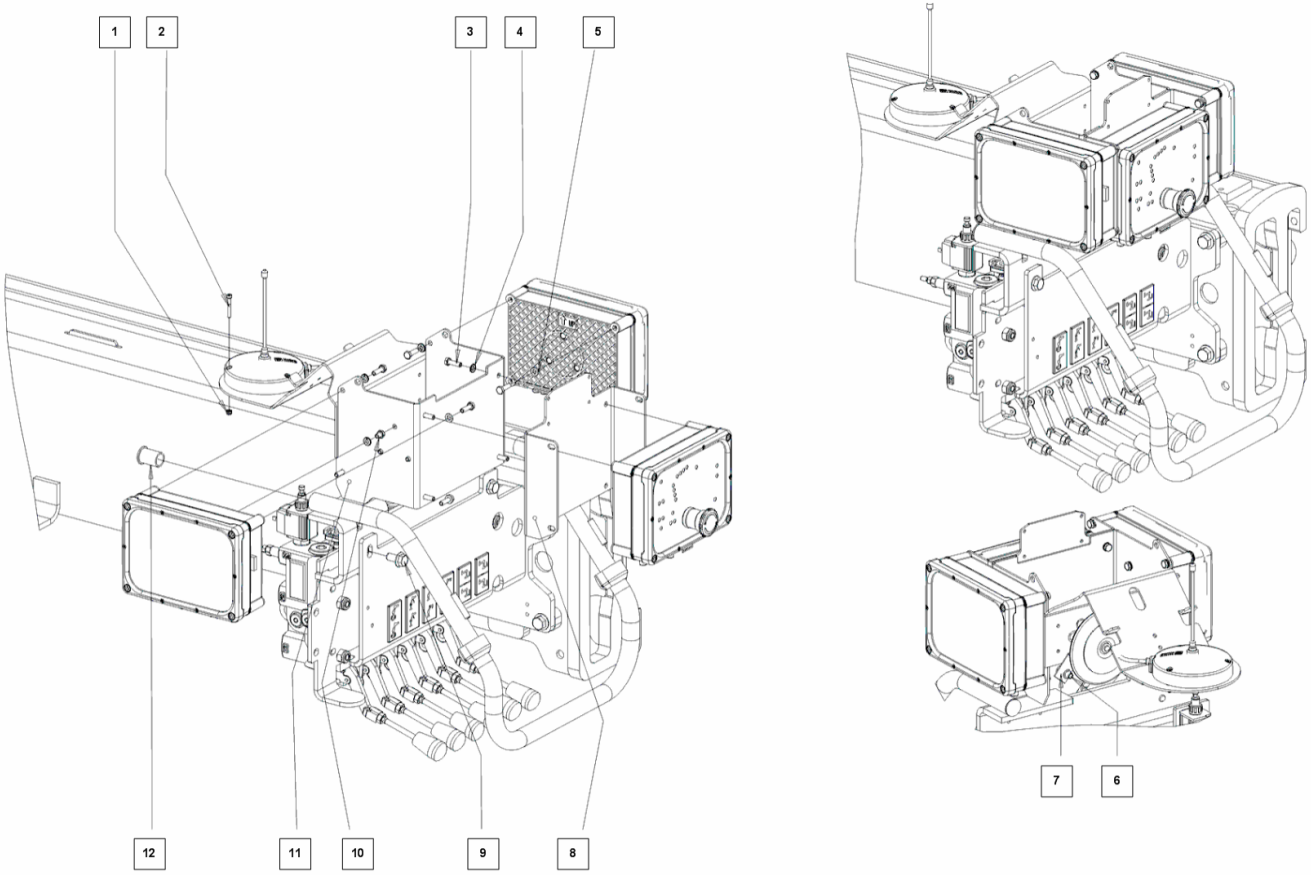

Pos	Part No	Description	Quantity
1	9832092	LOCKING NUT	3
2	9921974	SCREW	3
3	9907939	SCREW	12
4	9904115	SPRING WASHER M6	11
5	9903844	WASHER M6	4
6	9924051	SCREW	1
7	9965823	LOCKING NUT	1
8	1919113	FOLDED PLATE	1
9	4482301	BOLT	2
10	9984461	SCREW	3
11	1919067	FRAME	1
12	4475283	STOP	2

Model:BL088HD00027

Chapter

Serial number: BL088HD00027

3391566

3391566 Oil tank 100 L

3391566 - 3391566 Oil tank 100 L

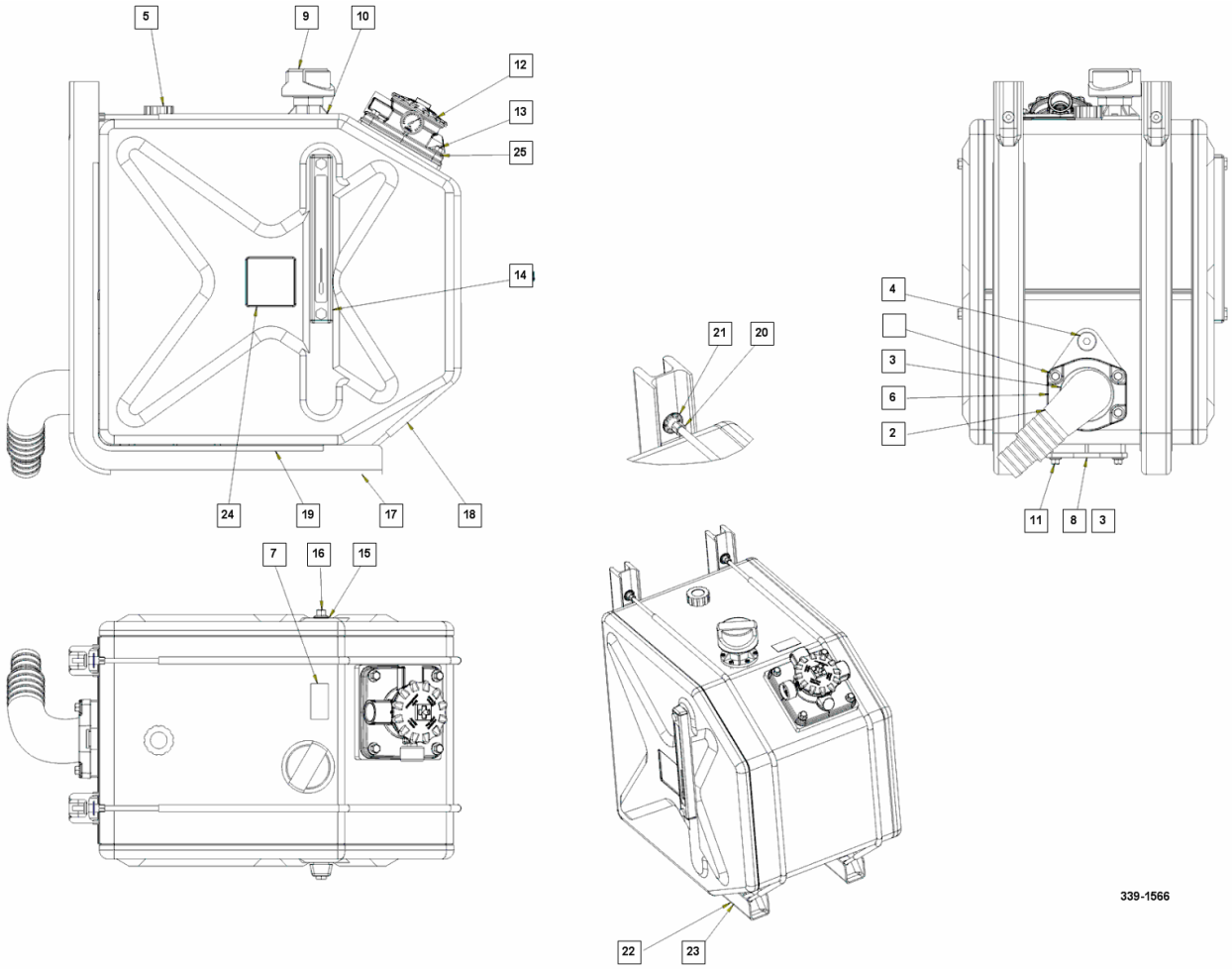

Pos	Part No	Description	Quantity
2	3375919	CONNECTOR	1
3	3375901	O-RING	2
4	3375927	PLUG	2
5	3375862	LEVEL SCALE	1
6	3375838	CLAMP	1
7	3375641	DECAL	1
8	3375889	COVER	1
9	3375854	FILLER CAP	1
10	3375960	SCREW	6
11	9880771	SCREW	4
12	9868810	RETURN FILTER	1
13	9880780	SCREW	8
14	3375650	LEVEL GAUGE	1
15	3375668	WASHER	1
16	9880836	SCREW	2
17	3375781	BRACKET	2
18	3375790	BAND	2
19	3375676	STRIP	4
20	3375684	NUT	2
21	3375692	LOCKING WASHER	2
22	9903861	WASHER M8	2
23	9965823	LOCKING NUT	2
24	3375706	DECAL	2
25	9914111	WASHER M10	4

Model:BL088HD00027

Chapter

Serial number: BL088HD00027

3661865

3661865 Load hook 8T

3661865 - 3661865 Load hook 8T

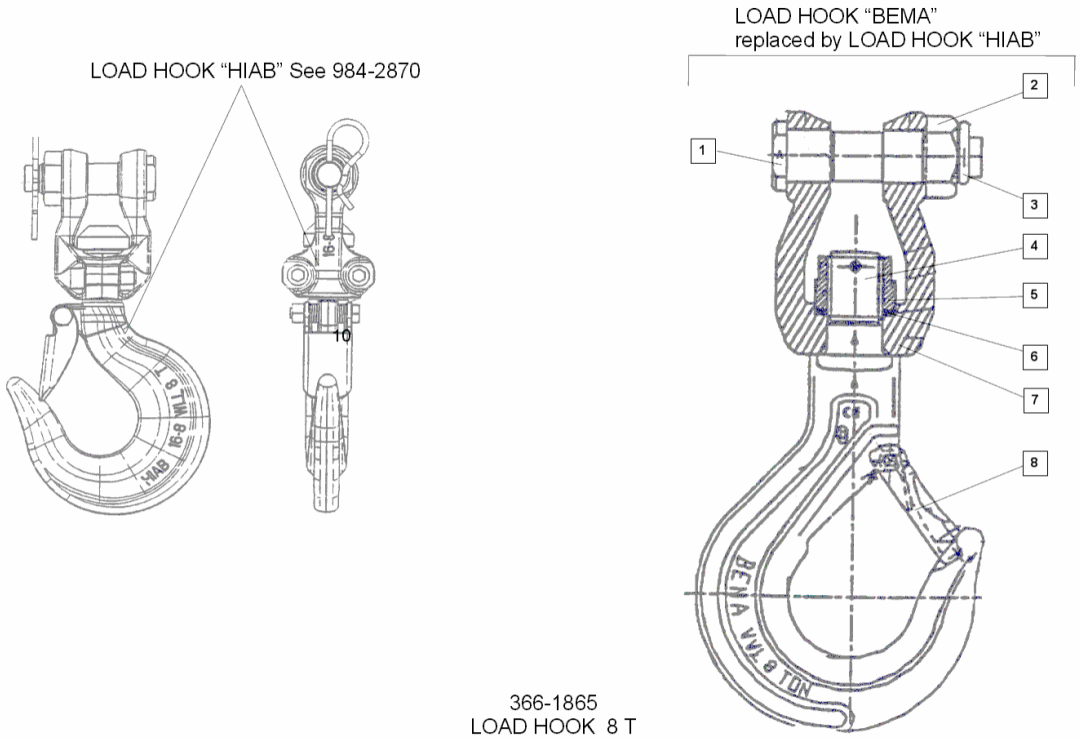

Pos	Part No	Description	Quantity
1	9842411	SHAFT	1
2	9829521	NUT	1
3	9975501	LOCKING PIN	1
4	9906924	EXPANDER PIN	1
5	9842187	NUT	1
6	9842209	WASHER	1
7	9842195	SWIVEL	1
8	9842217	CATCH	1
9	9842870	LOAD HOOK	0

Model:BL088HD00027

Serial number: BL088HD00027

3832724

Chapter

3832724 Spool sensors V80R 1m space 4000

3832724 - 3832724 Spool sensors V80R 1m space 4000

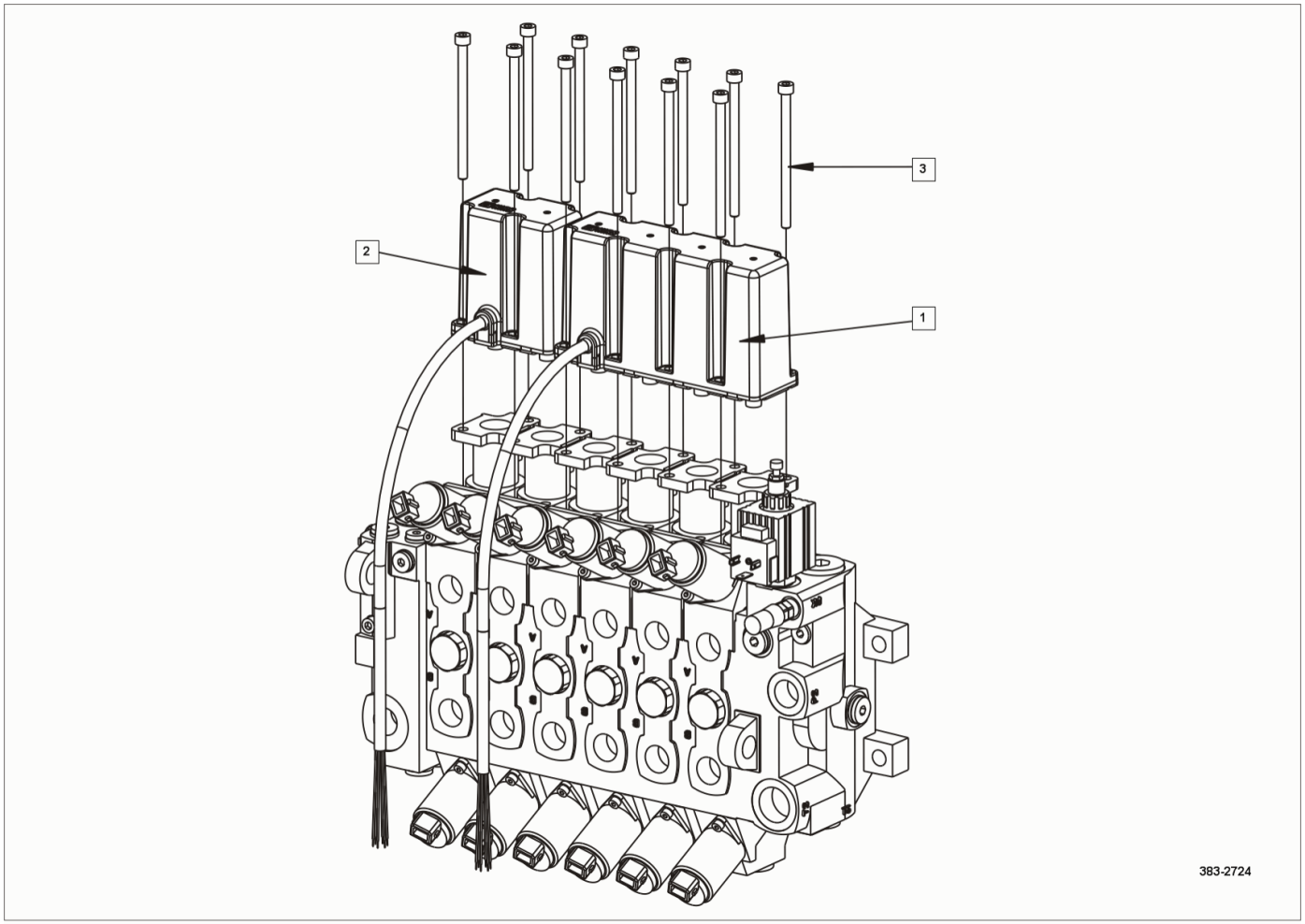

Pos	Part No	Description	Quantity
1	3744531	SPOOL POSITION SENSOR	1
2	3744540	SPOOL POSITION SENSOR	1
3	9879561	SCREW	12

Model:BL088HD00027 Serial number: BL088HD00027 3864421

Chapter 3864421 Space 4000 one side control CEN

3864421 - 3864421 Space 4000 one side control CEN

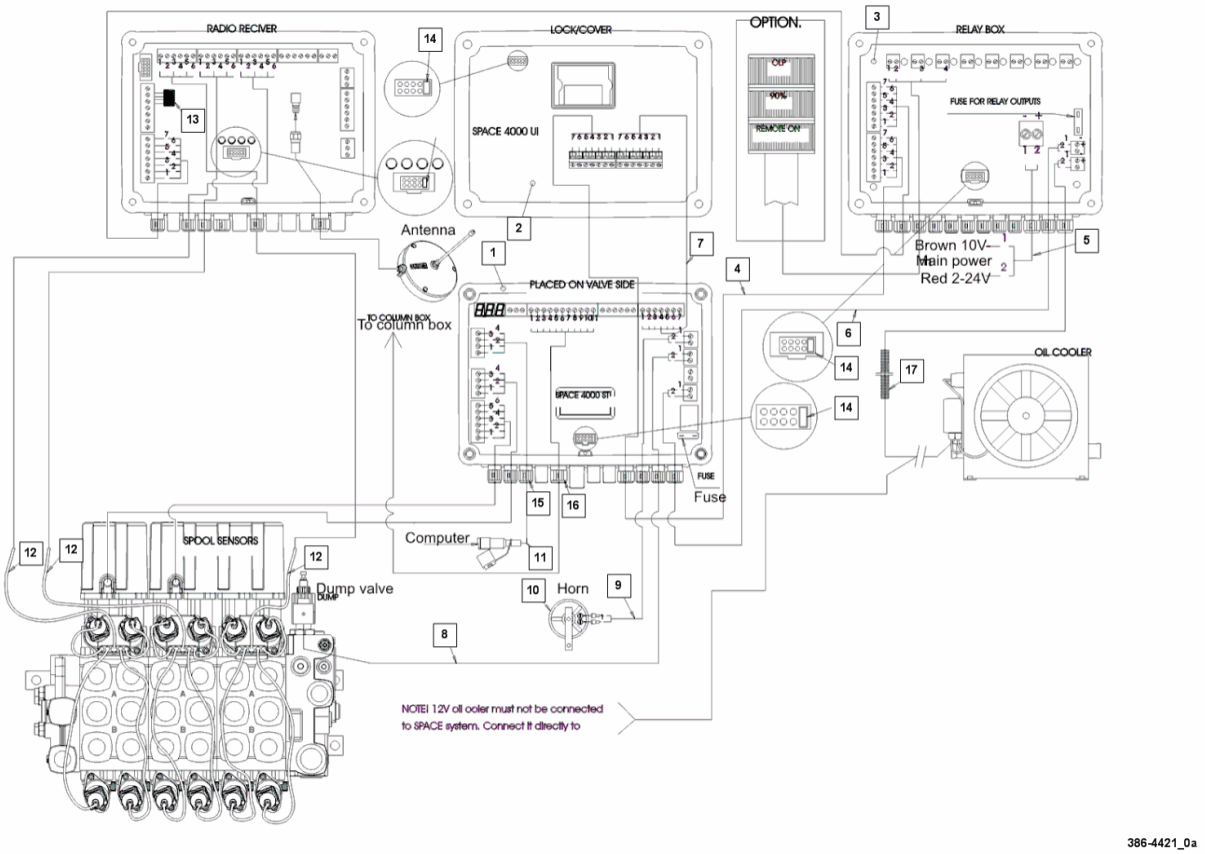

Pos	Part No	Description	Quantity
1	3853667	ELECTRONIC BOX	1
2	3853675	ELECTRONIC BOX	1
3	3760154	ELECTRONIC BOX	1
4	3763595	CABLE	1
5	3832201	CABLE	1
6	3763609	CABLE	1
7	3709558	CABLE	1
8	3870208	CABLE	1
9	3707563	CABLE	1
10	9848592	BUZZER	1
11	3629201	CABLE	1
12	3825451	CABLE	3
13	9854851	CLAMP	1
14	9815210	CLAMP	4
15	9854843	CLIP	11
16	9854835	CLIP	18
17	3717739	PROTECTING HOSE	1

Model:BL088HD00027 Serial number: BL088HD00027 3864456

Chapter 3864456 Cable kit 4000 TWI

3864456 - 3864456 Cable kit 4000 TWI

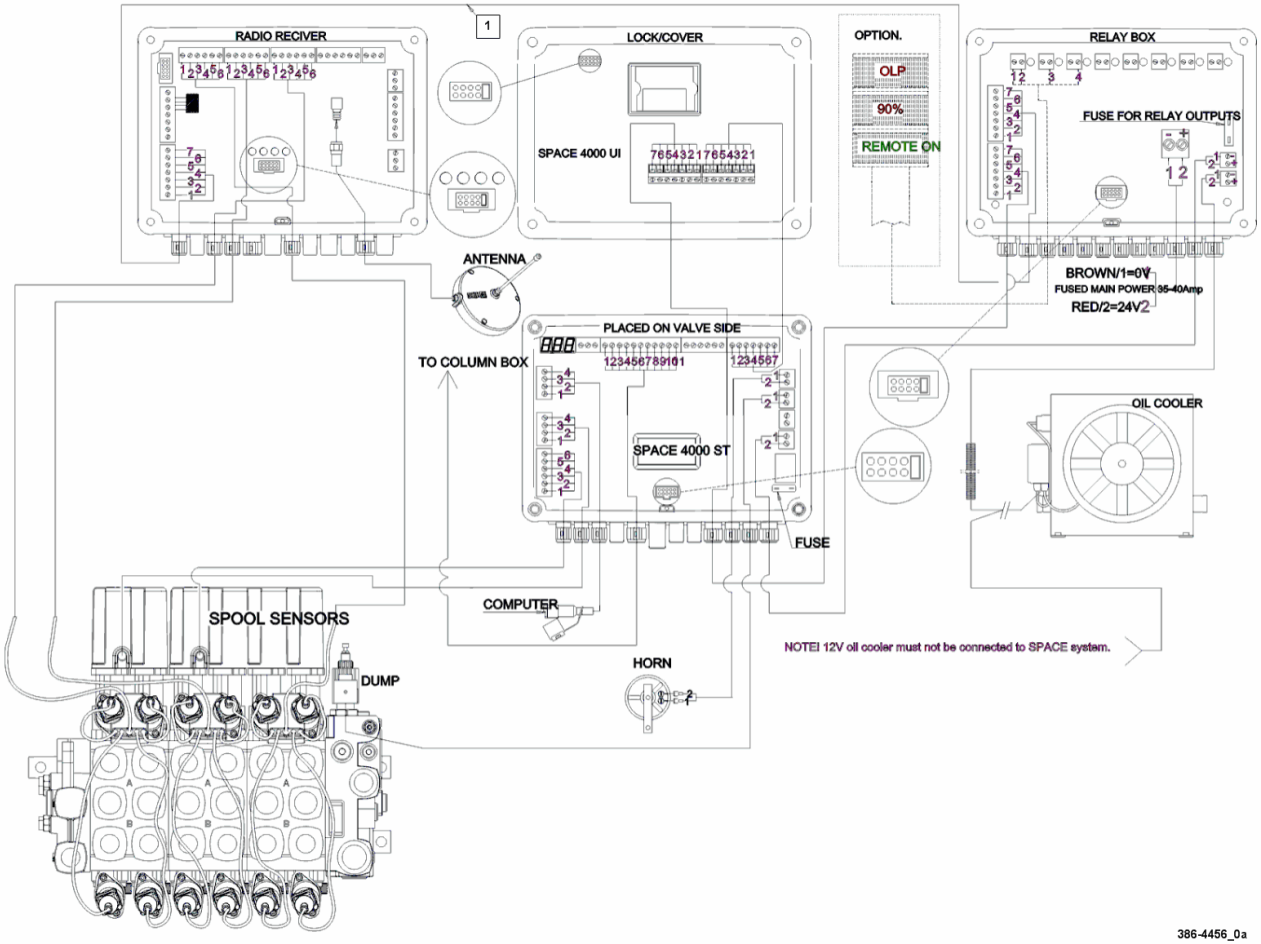

Pos	Part No	Description	Quantity
1	3764001	CABLE	1

3864456 Cable kit 4000 TWI - 3864456

Model:BL088HD00027 Serial number: BL088HD00027 3960439

Chapter 3960439 Contol valve v80 g2 6 f

3960439 - 3960439 Contol valve v80 g2 6 f

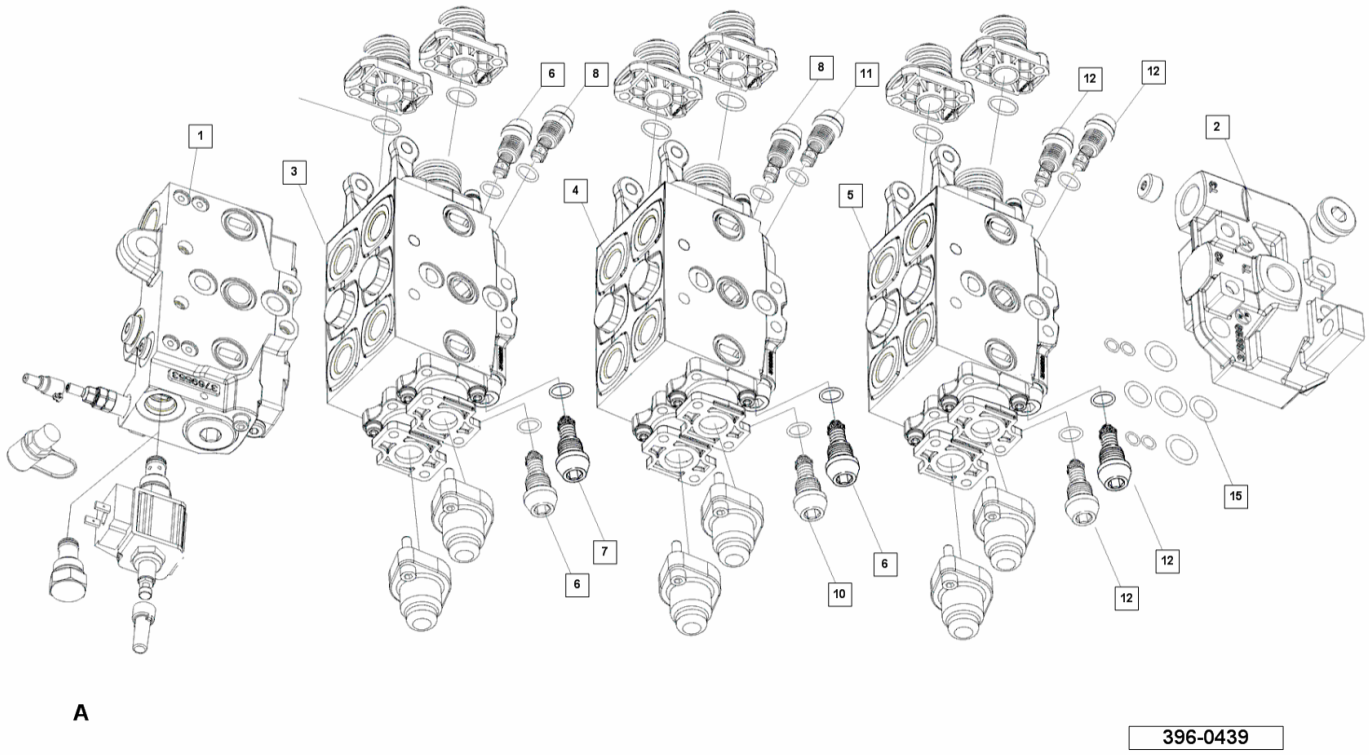

Pos	Part No	Description	Quantity
5	3954439	VALVE UNIT	1
6	9860355	RELIEF VALVE	2
7	9860339	RELIEF VALVE	1
8	9860461	RELIEF VALVE	2
9	9860452	RELIEF VALVE	1
10	9860410	RELIEF VALVE	1
11	9860479	SUCTION VALVE	1
12	9860321	RELIEF VALVE	4
13	9862030	PACKING SET	1

3960439 Contol valve v80 g2 6 f - 3960439

Model:BL088HD00027 Serial number: BL088HD00027 4912772

Chapter 4912772 General sign kitT

4912772 - 4912772 General sign kitT

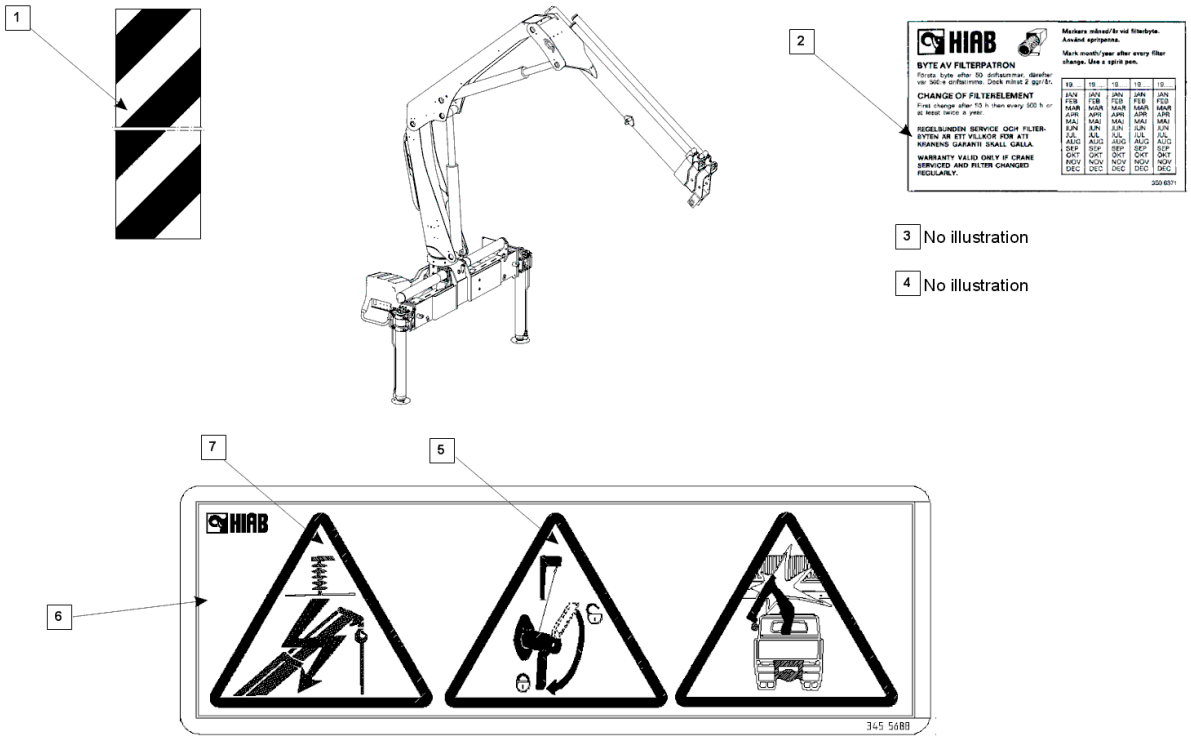

491-2772
GENERAL SIGN KIT

Pos	Part No	Description	Quantity
1	3635236	STICKER WARNING	4
2	3506371	SIGN	1
3	3446280	SIGN	2
4	4484215	LUBRICATION SIGN	1
5	3560007	WARNING SIGN	2
6	3455688	WARNING SIGN	1
7	3455661	WARNING STICKER	1

Model:BL088HD00027 Serial number: BL088HD00027 4971965

Chapter 4971965 Ext. L-1.2 (long) cpl. without hook support

4971965 - 4971965 Ext. L-1.2 (long) cpl. without hook support

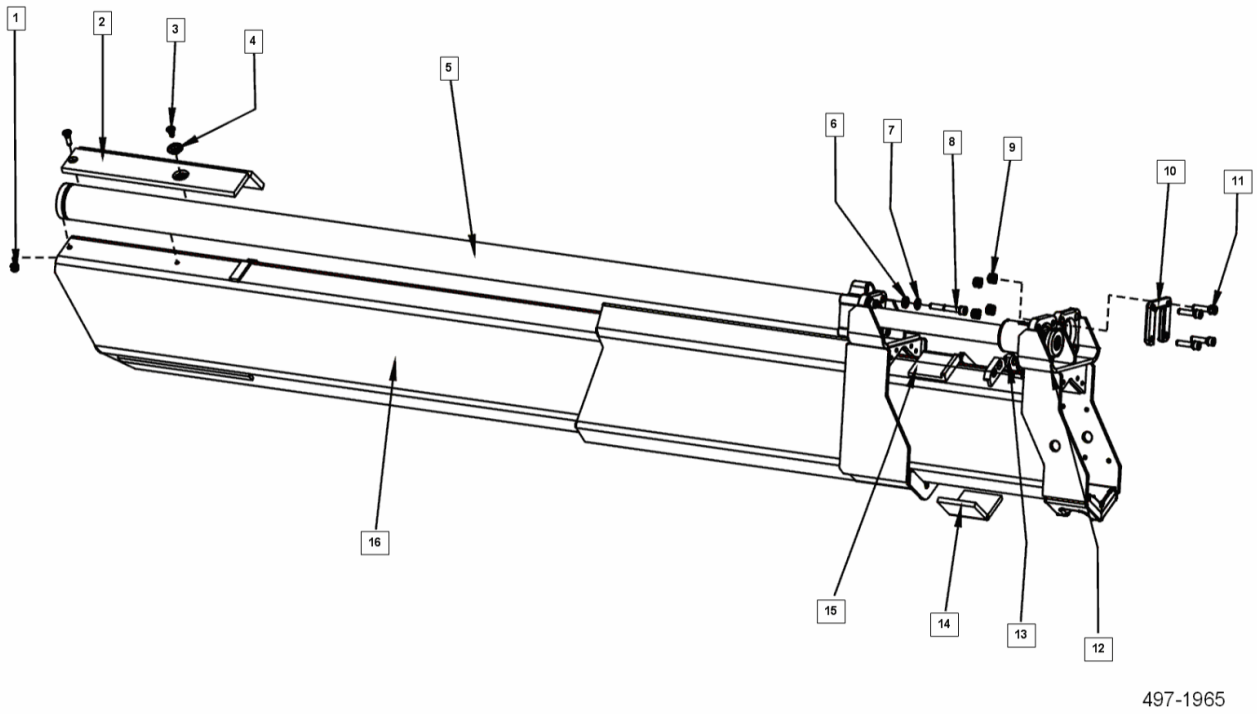

Pos	Part No	Description	Quantity
1	9965823	LOCKING NUT	2
2	8189137	SLIDE PAD	1
3	9984941	SCREW	2
4	8424942	DISTANCE WASHER	2
5	4971434	CYLINDER 63/40-1700	1
6	3661679	WASHER	4
7	9836012	WASHER	4
8	9922571	SCREW	4
9	9964347	LOCKING NUT	4
10	4962877	LOCKING PLATE	1
11	9922521	CH SCREW M10 x 40	4
12	9973371	SCREW	6
13	3634698	STOP	2
14	8166269	SLIDE PAD	1
15	8166277	SLIDE PAD	1
16	4977157	EXTENSION ARM	1

Model:BL088HD00027 Serial number: BL088HD00027 4977394

Chapter 4977394 Ext. L-3.3 (long) cpl. with hook support

4977394 - 4977394 Ext. L-3.3 (long) cpl. with hook support

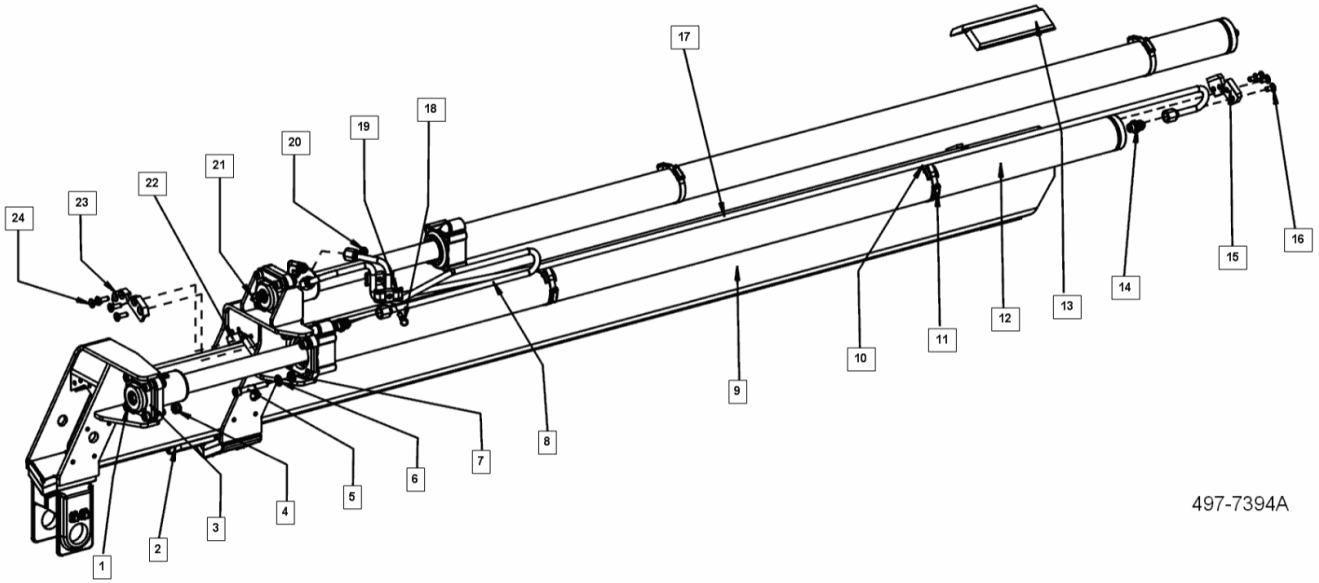

Pos	Part No	Description	Quantity
1	9922521	CH SCREW M10 x 40	4
2	4913311	SLIDE PAD	1
3	4962877	LOCKING PLATE	1
4	9964347	LOCKING NUT	4
5	9922571	SCREW	4
6	9836012	WASHER	4
7	3661679	WASHER	4
8	4977572	HYDR. PIPE	1
9	4977408	EXTENSION BOOM	1
10	3506495	SUPPORT	2
11	9917799	HOSE CLAMP	2
12	4971451	CYLINDER 63/40-1900	1
13	3634680	SLIDE PAD	1
14	9819223	COUPLING	2
15	3634728	STOP	2
16	9955526	SCREW	4
17	4977581	HYDR. PIPE	1
18	9924078	SCREW	1
19	8912670	CLAMP	2
20	9965823	LOCKING NUT	1
21	9819291	ANGLE COUPLING	2
22	8161771	SLIDE PAD	1
23	3626024	STOP	2
24	9973371	SCREW	4

Model:BL088HD00027 Serial number: BL088HD00027 4978994

Chapter 4978994 Cover cpl.

4978994 - 4978994 Cover cpl.

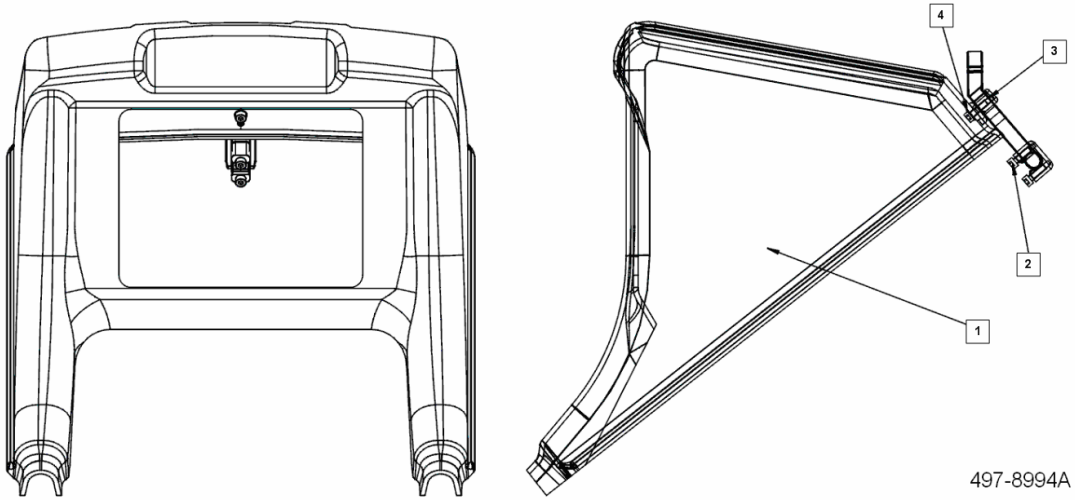

Pos	Part No	Description	Quantity
1	4978285	COVER	1
2	9839925	SCREW	3
3	9854649	COVERLOCK	1
4	9908242	WASHER	1

Model:BL088HD00027 Serial number: BL088HD00027 4987900

Chapter 4987900 1st boom cylinder mounting

4987900 - 4987900 1st boom cylinder mounting

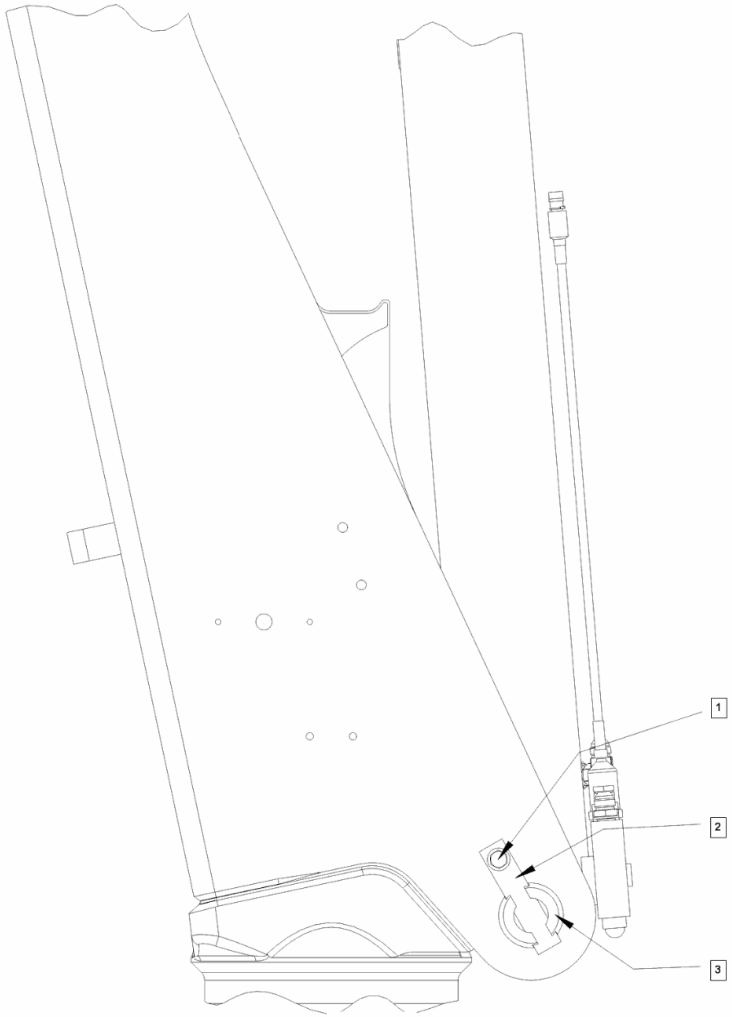

498-7900

Pos	Part No	Description	Quantity
1	4482301	SELFLOCKING BOLT	1
2	8188459	LOCKINGPLATE	1
3	4984439	SHAFT	1

4987900 1st boom cylinder mounting - 4987900

Model:BL088HD00027 Serial number: BL088HD00027 4987942

Chapter 4987942 2nd boom cylinder mounting

4987942 - 4987942 2nd boom cylinder mounting

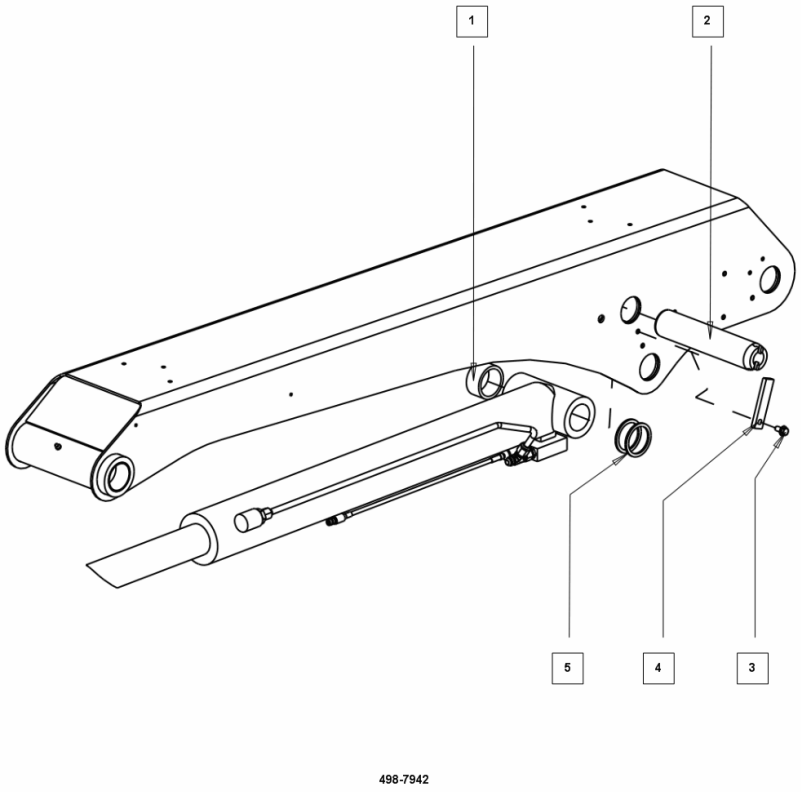

Pos	Part No	Description	Quantity
1	4971809	SPACER	1
2	4971639	SHAFT	1
3	4482301	SELFLOCKING BOLT	1
4	8188459	LOCKINGPLATE	1
5	4993047	SPACER	1

Model:BL088HD00027 Serial number: BL088HD00027 4993349

Chapter 4993349 Folding support

4993349 - 4993349 Folding support

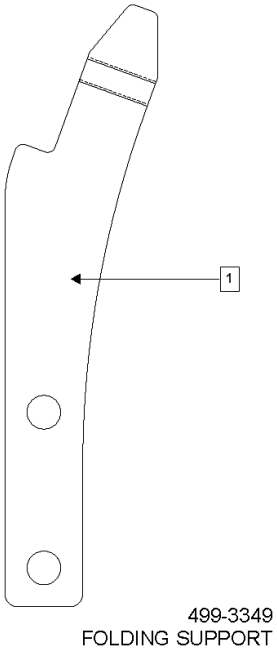

Pos	Part No	Description	Quantity
1	4993349	FOLDING SUPPORT	1

4993349 Folding support - 4993349

Model:BL088HD00027 Serial number: BL088HD00027 4993519

Chapter 4993519 Column with bearings (Length 2000)

4993519 - 4993519 Column with bearings (Length 2000)

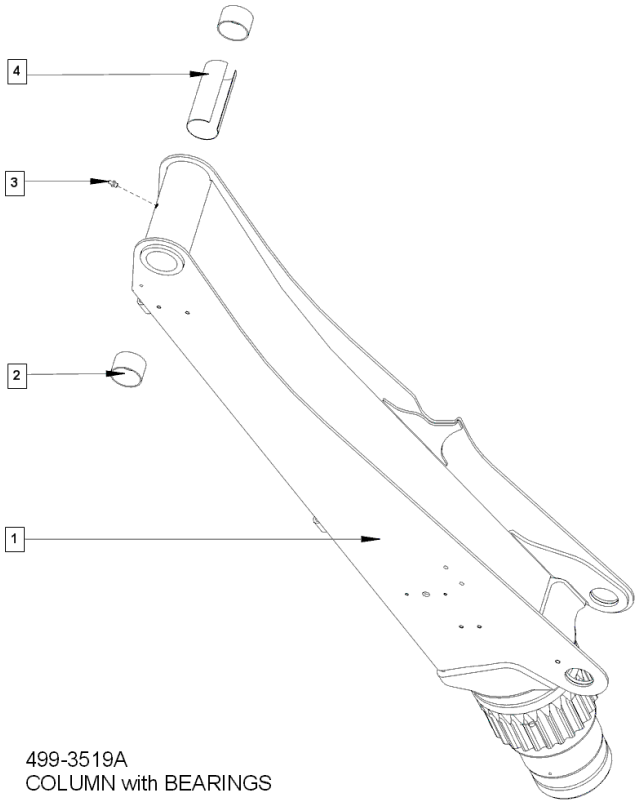

Pos	Part No	Description	Quantity
1	4993233	LOADER BODY MACHINED	1
2	9991956	BUSHING	2
3	9906185	GREASE NIPPLE	1
4	8490627	SPACING TUBE	1

4993519 Column with bearings (Length 2000) - 4993519

Model:BL088HD00027 Serial number: BL088HD00027 4993560

Chapter 4993560 1st boom with bearings (length 2075)

4993560 - 4993560 1st boom with bearings (length 2075)

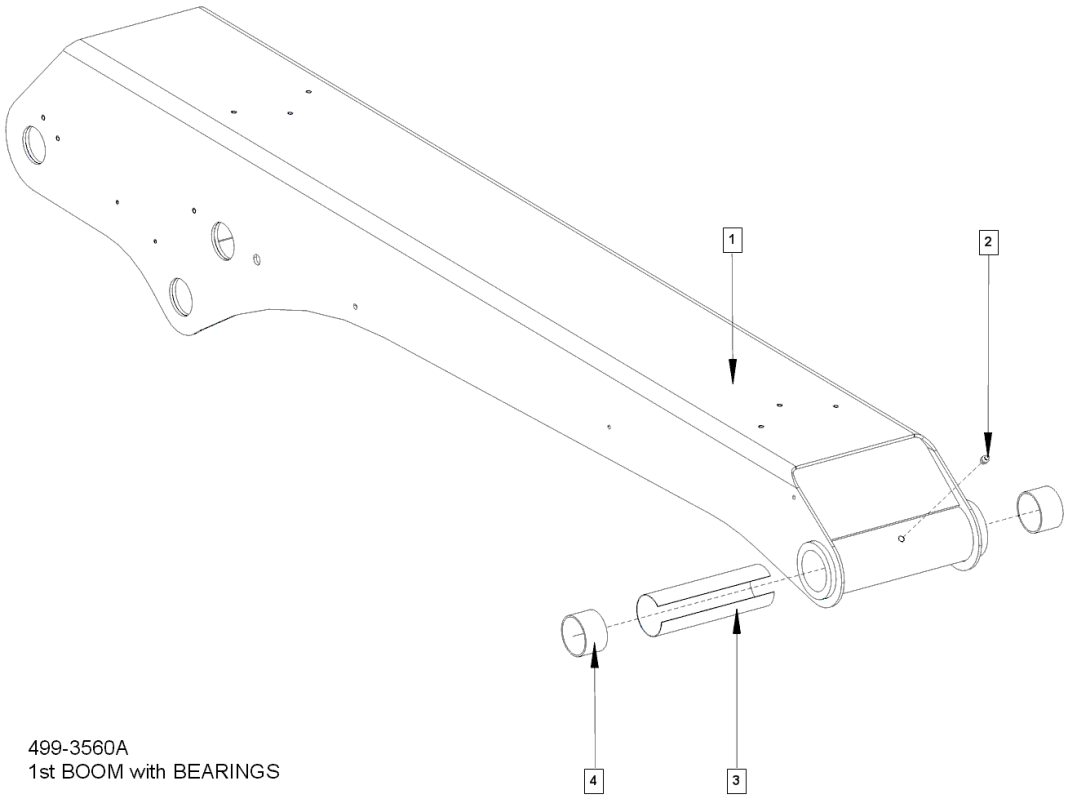

Pos	Part No	Description	Quantity
1	4971256	FIRSTBOOM MACHINED	1
2	9906185	GREASE NIPPLE	1
3	4993543	SPACING TUBE	1
4	9991956	BUSHING	2

4993560 1st boom with bearings (length 2075) - 4993560

Model:BL088HD00027 Serial number: BL088HD00027 4993608

Chapter 4993608 Shaft assembly 1st boom

4993608 - 4993608 Shaft assembly 1st boom

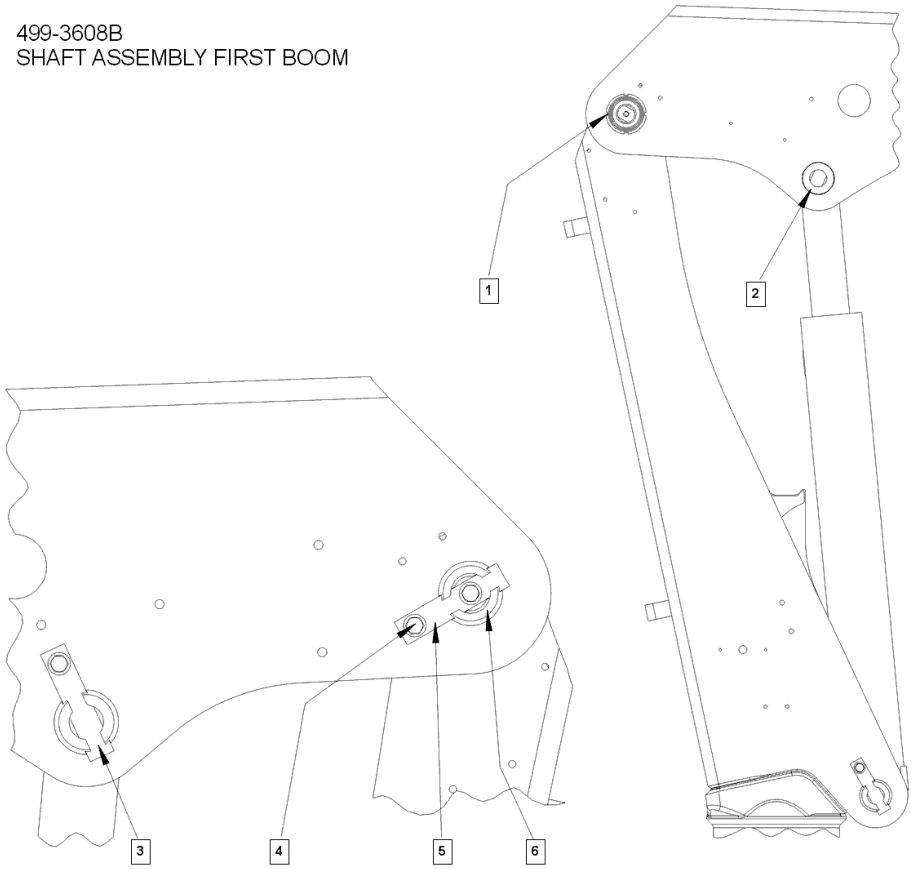

Pos	Part No	Description	Quantity
1	9979786	LOCKING NUT	1
2	4971639	SHAFT	1
3	8188459	LOCKINGPLATE	1
4	4482301	SELFLOCKING BOLT	3
5	1805681	SECURING PLATE	1
6	8188424	SHAFT	1

4993608 Shaft assembly 1st boom - 4993608

Model:BL088HD00027 Serial number: BL088HD00027 4993624

Chapter 4993624 Shaft assembly 2nd boom

4993624 - 4993624 Shaft assembly 2nd boom

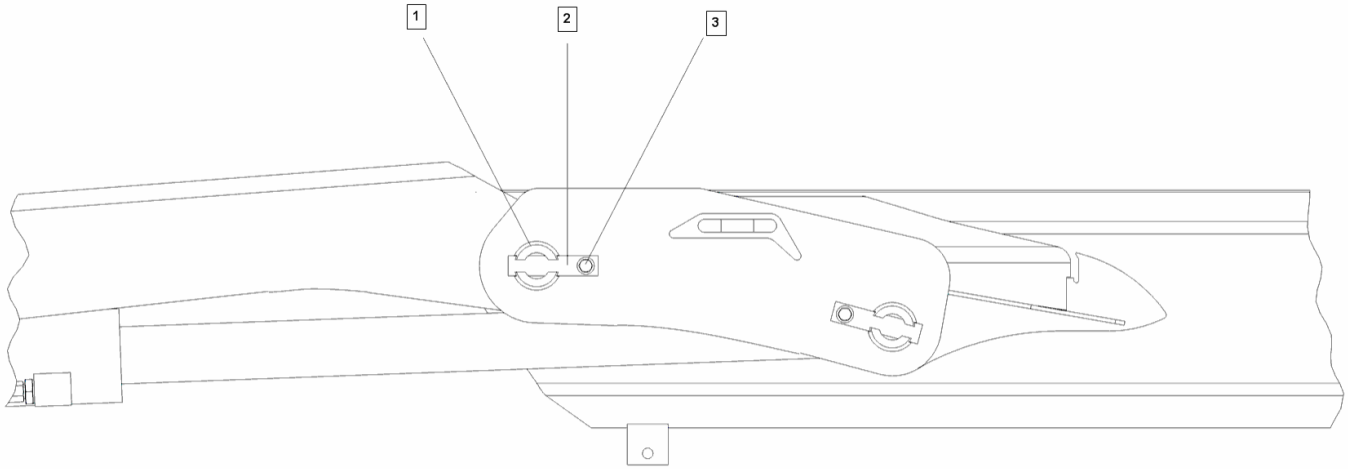

499-3624

Pos	Part No	Description	Quantity
1	4971591	SHAFT	2
2	8188459	LOCKINGPLATE	2
3	4482301	SELFLOCKING BOLT	2

4993624 Shaft assembly 2nd boom - 4993624

Model:BL088HD00027 Serial number: BL088HD00027 4993721

Chapter 4993721 Hoses column 2000, base 2300

4993721 - 4993721 Hoses column 2000, base 2300

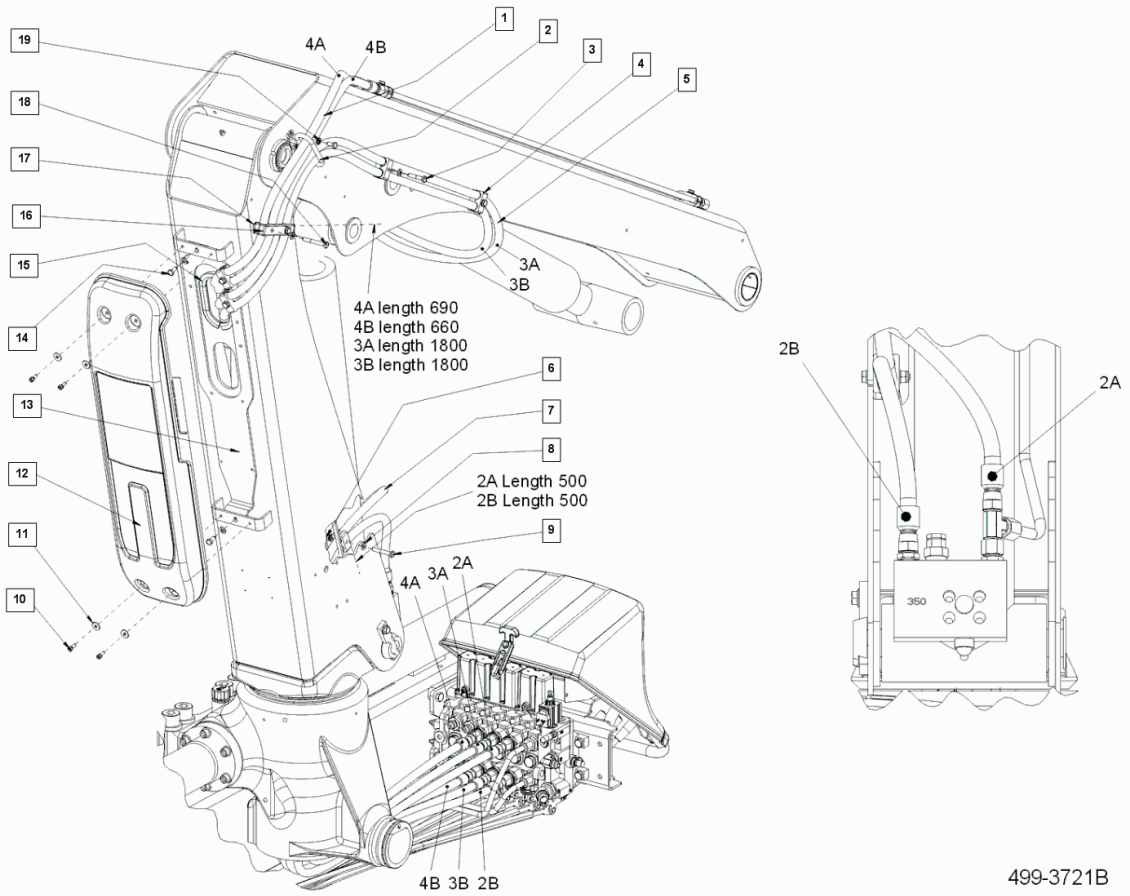

Pos	Part No	Description	Quantity
1	9872264	HP HOSE LG 3150	2
2	4971604	BRACE	1
3	9924078	SCREW	3
4	3197336	HOSE CLAMP	10
5	9872167	HP HOSE LG 4250	2
6	9965823	LOCKING NUT	2
7	9872124	HP HOSE LG 1900	2
8	9903861	WASHER	10
9	9924094	SCREW	2
10	9990631	SCREW	4
11	9858989	WASHER	4
12	4993021	COVER	1
13	4993055	MOUNTING PLATE	1
14	9906878	SCREW	4
15	1808141	CLAMP PROFILE	1
16	8934355	CLAMP	2
17	3628116	PIPE	2
18	9924116	SCREW	2
19	9904131	SPRING WASHER	2

Model:BL088HD00027 Serial number: BL088HD00027 4993756

Chapter 4993756 Pipes 1st boom (basic functions)

4993756 - 4993756 Pipes 1st boom (basic functions)

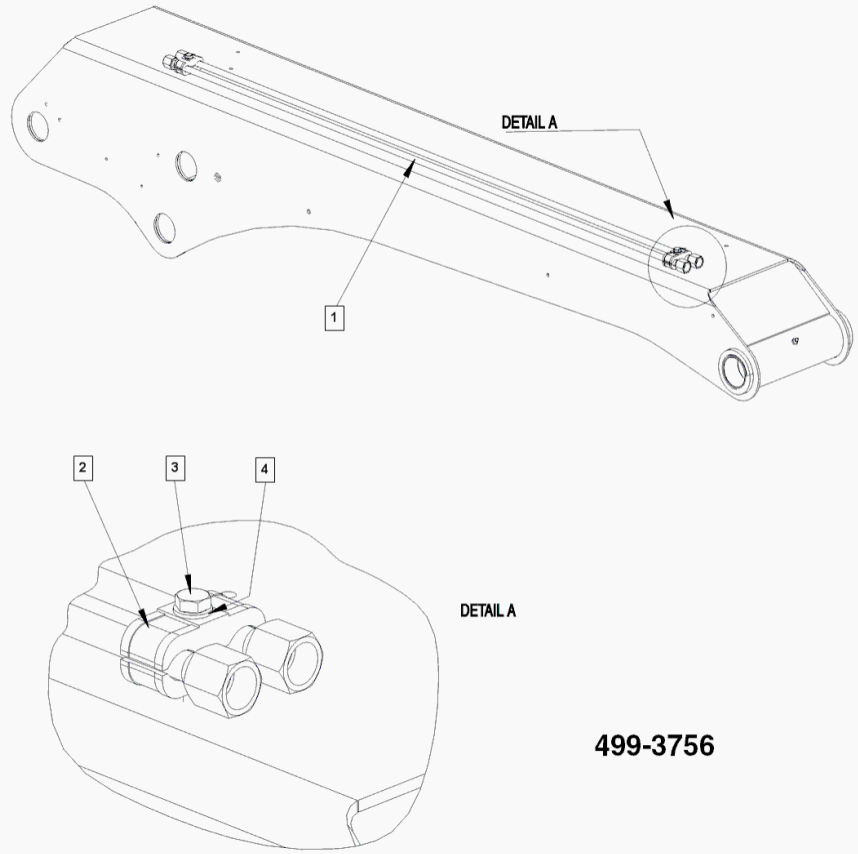

Pos	Part No	Description	Quantity
1	4971817	HYDRAULIC PIPE	2
2	8912670	CLAMP	4
3	9924078	SCREW	2
4	9903861	WASHER	2

Model:BL088HD00027 Serial number: BL088HD00027 4997379

Chapter 4997379 2nd (BS-) boom

4997379 - 4997379 2nd (BS-) boom

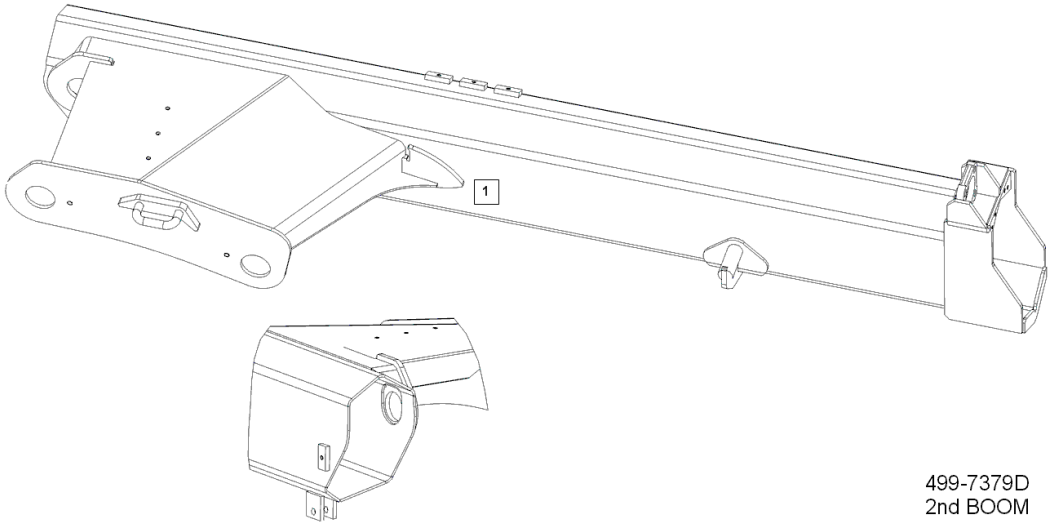

Pos	Part No	Description	Quantity
1	4997379	SECOND BOOM	1

4997379 2nd (BS-) boom - 4997379

Model:BL088HD00027 Serial number: BL088HD00027 5436346

Chapter 5436346 Front stop

5436346 - 5436346 Front stop

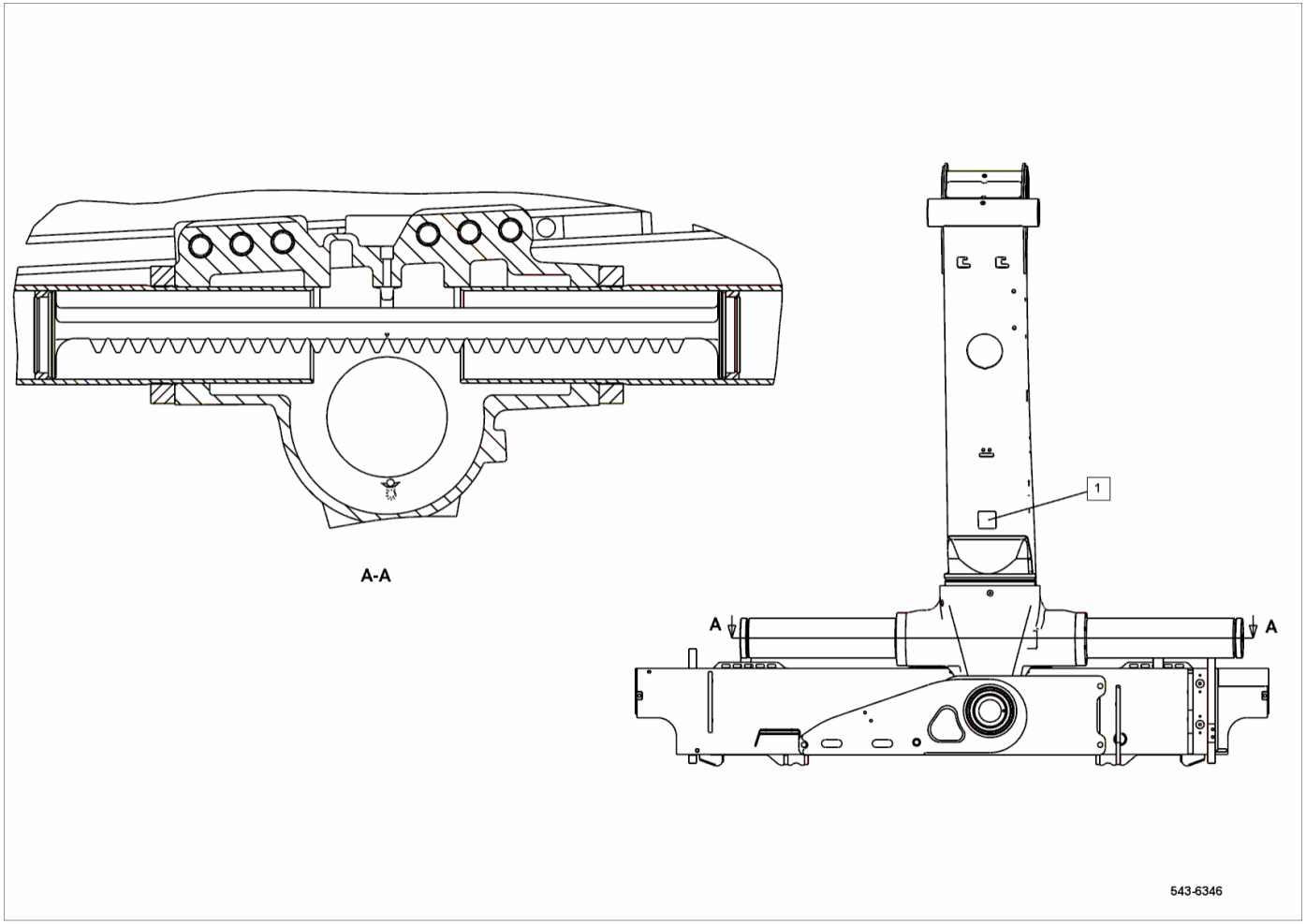

Pos	Part No	Description	Quantity
1	8967091	SIGN	1

5436346 Front stop - 5436346

Model:BL088HD00027 Serial number: BL088HD00027 6001327

Chapter 6001327 Shims for slide pads in boom systems

6001327 - 6001327 Shims for slide pads in boom systems

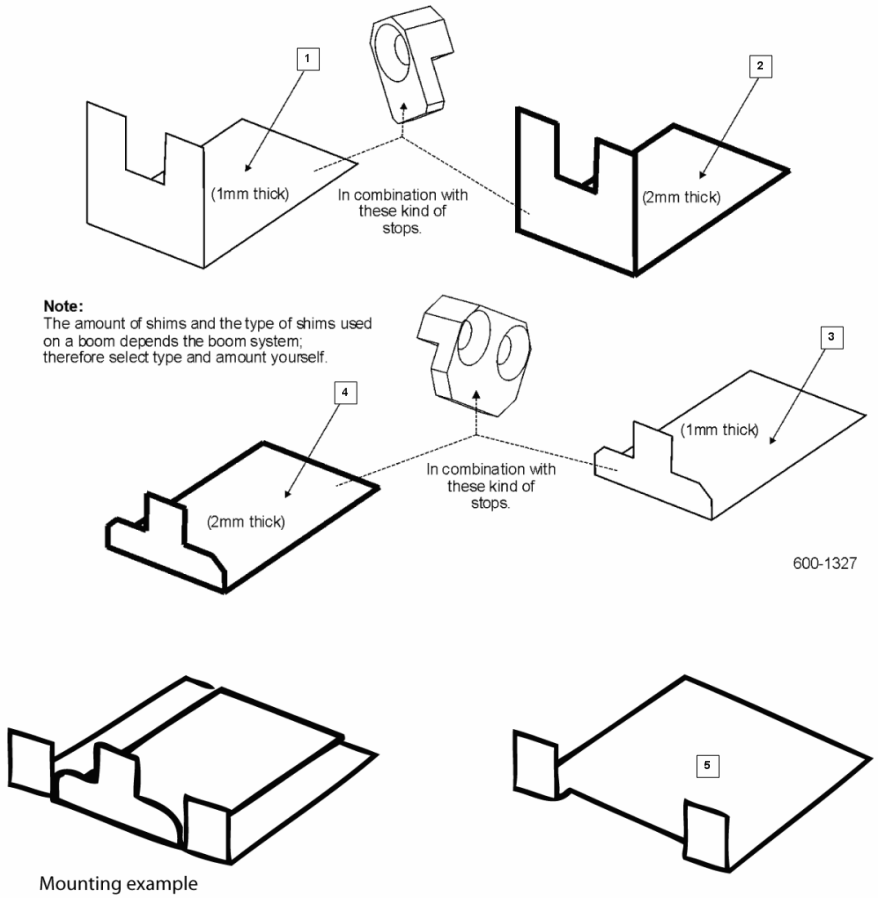

Pos	Part No	Description	Quantity
1	4913426	SHIM	1
2	4913418	SHIM	1
3	8163031	SHIM	1
4	8163022	SHIM	1
5	1921550	SHIM	1

6001327 Shims for slide pads in boom systems - 600132